ROVER ENVIRONMENTAL MONITORING STATION REMS

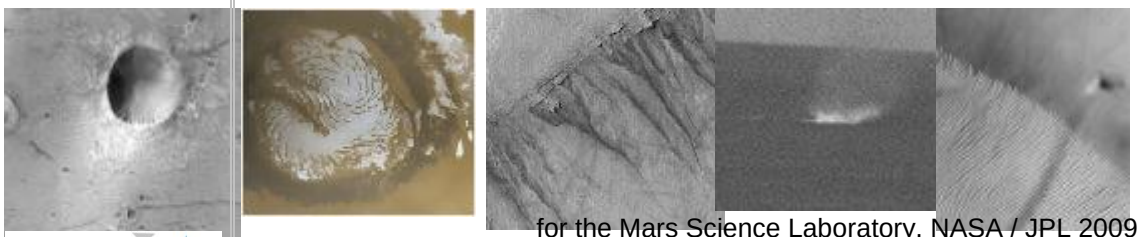

for the Mars Science Laboratory, NASA / JPL 2009

REMS CALIBRATION PLAN

CAB-REMS-PLN-002
Issue 02

CENTRO DE ASTROBIOLOGÍA
ASOCIADO AL NASA ASTROBIOLOGY INSTITUTE

ROVER ENVIRONMENTAL MONITORING STATION (REMS)

Título *Title*	REMS CALIBRATION PLAN
Doc. núm. *Doc. no.*	CAB-REMS-PLN-002
Edición *Issue*	Issue 02
Fecha *Date*	

Preparado por *Prepared by*	REMS Team (See page 6)	Fecha: *Date* :
Revisado por *Revised by*	REMS Team (See page 6) Manuel de la Torre (JPL)	Fecha: *Date* :
Autorizado por *Autorized by*	J. Gómez-Elvira(CAB)	Fecha: *Date* :
Aceptado por *Accepted by*		Fecha: *Date* :

CENTRO DE ASTROBIOLOGIA (CSIC-INTA)
Carretera de Ajalvir Km. 4
28850 Torrejón de Ardoz
Madrid
SPAIN

CENTRO DE ASTROBIOLOGIA
DOCUMENT CHANGE RECORD

Ed. *Issue*	Fecha *Date*	Sección –Párrafo afectado *Section – Parragraph Affected*	Descripción del cambio *Reason of change - Remarks*
Draft 01	2 April 2007	All	Initiating Document
Draft 02	June 2007	3	Updated Requirements after CDR
		4	Fig 1 updated Fig 3 added
		5.1	1. updated
		6	GT Sensor Calibration updated: Fig 6-1 new Fig 6-2 new Fig 6-5 new
		7	UV sensor Calibration updated
		9	All section changed by FMI
		10	All section changed by FMI
Draft 03	December 2007		Complete review
Draft 04	January 2008	ALL	Grammar and Vocabulary review Participants list updated
		1	modified
		2	2.2 updated 2.3 updated
		5	new
		6	updated
		7	7.4.5 completed 7.5 changed Conclusions to L2 requirements deleted
		7	Figure 8-3 label changed 8.1.1 0.52 m and 0.91m included 8.1.1.1changed FOV obstruction by the mast section deleted 8.1.1.3 Corrected 8.1.1.4 Completed 8.2.1 changed 8.2.2 Completed and corrected Figure 8-11 added 8.3.1 updated Table 8-2 updated Table 8-3 updated 8.2.4.1 detailed 18.4 updated UV_6 eliminated 8.4.4 2°C/min is not a constraint any more. 8.5 updated Figure 8-11 inserted 8.6 changed

		9	0completed 9.1.3 completed 9.1.3.1completed 9.2 completed9.2.4 Changed title 9.2.4.1removed information. Changed title 9.3clarified 9.3.1Table 9-7 updated, WS_T13 new 9.3.2.2 clarified 9.3.2.3 completed and corrected 9.3.2.4 requirements added 9.3.2.5 completed 9.3.2.6 requirements added 9.3.2.7requirements corrected 9.3.2.8 clarified, requirements corrected 9.3.2.9 clarified 9.3.2.11complete changed 9.3.2.13 new 9.3.4.1clarified 9.4 new
		10	Changed REMS-H by HS 10.4 changed
		0	Changed REMS-P by PRS and updated new new 0 new 0 changed
		12	Changed AT Sensor by ATS 12.3 Full revision Conclusions to L2 requirements deleted
		Annex A	deleted
Draft 05	June 2008		
		6	Updated
		7	Full revised
		8	Full revised
		9	Full revised
		12	Full revised
Draft 06	July 2008		Full revised
Issue 01	November 2009		Full revised
Issue 02	May 2011		GTS Calibration updated

REMS TEAM CONTRIBUTORS

Full Document	Coordinado por *Document Coordination*	Roser Urquí (CAB)
	Revisado por *Revised by*	Javier Gómez Elvira (CAB) Ian McEwan (Caltech) Don Banfield (JPL) Manuel de la Torre (JPL) Roser Urquí (CAB)
Ground Temperature Sensor	Preparado por *Prepared by*	Eduardo Sebastián (CAB)
	Revisado por *Revised by*	Maria Paz Zorzano (CAB) Jesús Martínez Frías (CAB)
Ultraviolet Sensor	Preparado por *Prepared by*	Roser Urquí(CAB)´ Javier Martín (CAB) Maria Paz Zorzano (CAB) Jose Antonio Rodríguez Manfredi (CAB)
	Revisado por *Revised by*	Guillermo Muñoz Caro (CAB) Jose Alexander Verdasca (CAB) Felipe Gómez (CAB) Robert Haberle (NASA/AMES) Miguel Ramos (UAH)
Wind Sensor	Preparado por *Prepared by*	Sara Navarro (CAB) Julio Romeral Planelló (CAB) Javier Gómez Elvira (CAB) Josefina Torres (CAB)
	Revisado por *Revised by*	Jose Alexander Verdasca (CAB) Alain Lepinette (CAB) Luis Castañer (UPC) Miguel Pumar (UPC) Vicente Jiménez (UPC) Lukas .Kowalski (UPC) Jordi Ricart(UPC) Tirso Velasco (CRISA) Nilton Renno (Michigan University)
Humidity Sensor	Preparado por *Prepared by*	Maria Genzer (FMI) A-M. Harri (FMI) J. Polkko (FMI)
	Revisado por *Revised by*	Maria Paz Zorzano (CAB) Miguel Ramos (UAH) Nilton Renno (Michigan University) Felipe Gómez (CAB) Jose Alexandre Verdasca
Pressure Sensor	Preparado por *Prepared by*	Maria Genzer (FMI) A-M. Harri (FMI) J. Polkko (FMI)
	Revisado por *Revised by*	Maria Paz Zorzano (CAB) Robert Haberle (NASA/AMES) Felipe Gómez (CAB) Jose Alexandre Verdasca
Air Temperature Sensor	Preparado por *Prepared by*	Eduardo Sebastián (CAB) Alain Lepinette (CAB)
	Revisado por *Revised by*	Jose Alexander Verdasca (CAB) Maria Paz Zorzano (CAB)

CONTENTS

LIST OF FIGURES

LIST OF TABLES

1 PURPOSE

The aim of this document is to define the methods, which will be followed to calibrate the REMS instrument. The results of the calibration tests will be used during the operation phase to translate the engineering data to physical values. The results of these tests will be used to verify the accuracy, precision and limitations of the sensors.

The final performance of the instrument is a combination of both sensors and electronics. Hardware performance estimations are a combination of analysis and tests; with the worst cases analysis yield estimated end-of-life electronics errors and beginning of life errors, which are verified during the qualification tests. REMS has an exception, which is the ASIC that is going to be calibrated against temperature.

The calibration reports include the final performances of the instruments, because they will combine sensors model errors and electronic performances at both beginning and end of life.

1.1 SCOPE

To cover all calibration-related “deliverables” described in the REMS Experiment Implementation Plan (AD2).

1.2 OBJECTIVES

To collect data sets of engineering data in the various instrument states, to be used to assure correct instrument operation.
To monitor and document hours of use of mechanisms and electronics.
To identify experiments and algorithms to implement procedures to be performed during calibration and performance verification.

1.3 DOCUMENT ORGANIZATION

This plan is divided in two parts. The first part is the general description of the REMS instrument and requirements, and the general description of the calibration procedure. The second part will include the calibration of every sensor separately with a detailed description of the sensor and the set of tests and procedures to perform. At the a description is shown of the facilities where the calibrations are going to be performed.

2 DOCUMENTS & NOMENCLATURE

2.1 APPLICABLE DOCUMENTS

AD1 Instrument Functional Requirements CAB-REMS-SPC-001 issue2
AD2 Experiment implementation plan CAB-REMS-PLN-001

2.2 REFERENCE DOCUMENTS

RD1 Definition File Document, CRS-REMS-TFL-0028
RD2 McEwan, I., Richardson, M., MSL Proposal, *MIDAS: Mars Ice and Dust Atmospheric Sounder.*
RD3 GT-Sensor Worst Case Error Analysis, CRS-REMS-ANA-0121
RD4 Effect of the variation of the direct beam incident angle in the REMS photodiodes response TBD, J. Martin. CAB-REMS-TRT-0007
RD5 Allen, C.C. et al, "*JSC MARS-1: Martian Regolith Simulant*" Lunar and planetary Science XXVIII, 1797.PDF.
RD6 K. Kinch. *Numerical Modeling of Magnetic capture of Martian Atmospheric Dust*, PhD thesis 2005.
RD7 *The dust magnetic filter* CAB-REMS-SCR-0003
RD8 Experimental results of the effect of the magnets as a dust magnetic filter, J. Martín. CAB-REMS-TRT-0006
RD9 E. Mateo, O Prieto-Ballesteros, J. M. Sobrado, J Gomez Elvira and J. A. Martin Gago, *A chamber for studying planetary environments and its applications to astrobiology,* Meas. Sci. Technol. 17 (2006) 2274-2280
RD10 G. M. Muñoz Caro, E. Mateo-Martí and J. Martínez Frías, *Near-UV Transmittance of Basalt Dust as an analogue of the Martian Regolith: Implications for sensor calibration and astrobiology,* Sensors 2006, 6, 688-696
RD11 REMS ASIC Details design document AUR-REMS-DDD-0001
RD12 Instrument, verification and test plan CRS-REMS-PLN-0036
RD13 Ultraviolet photodiodes specification, last issue CRS-REMS-SPC-0006
RD14 UV Sensor specifications CRS-REMS-SPC-0039
RD15 UV FOV Update: Scientific and technical implications CAB-REMS-SCR-0005
RD16 REMS Component screening and qualification plan jec-1 photodiodes TEC-REMS-PNL-0001_issue1
RD17 REMS UV photodiode expected current CAB-REMS-SCR-0006
RD18 Norbert Schirghofer, Kenneth S. Edgett, *Seasonal Surface frost at low latitudes on Mars.* Lunar and Planetary Science XXXVI (2005)
RD19 Simulation-based Inverse Model Development CAB-REMS-DRT-001
RD20 Wind Sensor Functional Test Campaign Procedure CAB-REMS-TRT-004
RD21 Wind Sensor Functional Tests Campaign Results CAB-REMS-TRT-005
RD22 Zurek et al, 1992: "*Dynamics of the atmosphere of Mars*", Mars, University of Arizona Press, Chapter 26, pp 835-933.
RD23 REMS-Pressure and Humidity Sensors development plan FMI-REMS-DDP-0002
RD24 REMS-P and REMS-H Manufacturing, Assembly, Integration and Test Plan FMI-REMS-PLN-0004
RD25 Humidity sensor specification FMI-REMS-TPO-0023
RD26 QM Test Procedures, REMS-H Humidity Sensor FMI-REMS-TNO-0050
RD27 Pressure sensor specification CRS-REMS-SPC-0013
RD28 QM1 Test Procedures, REMS-P Pressure Sensor FMI-REMS-TPO-0068
RD29 Test Specifications for higher assembly level tests, REMS-P Pressure Sensor FMI-REMS-TPO-0090

RD30 Thermal and hydrodynamic boundary layer thicknesses for cylinders in axial and cross-flow; application to the positioning of REMS sensors, CAB-REMS-MEMO-0007
RD31 (REMS-ICP-017-CRS
RD32 CRS-REMS-TPO-0112.

2.3 ACRONYMS AND ABBREVIATIONS

AD	Applicable Document
ASIC	Application Specific Integrated Circuit
ATS	Air Temperature Sensor
BCE	Best Current Estimated
BOL	Beginning Of Life
CAB	Centro de Astrobiología
CamMast	MSL Rover Remote Sensor Mast
EFDLab	Fluid Flow and Heat Transfer Simulation Software
EM	Engineering Model
EOL	End Of Life
FM	Flight Model
FMI	Finnish Meteorological Institute
FOV	Field of View
FPGA	Field Programmable Gate Array
Glong	Longitudinal Thermal Conductance
Gtrans	Transversal Thermal Conductance
GTS	Ground Temperature Sensor
HS	Humidity Sensor
ICU	Instrument Control Unit
LDA	Laser Doppler Anemometry
LDWT	Low Density Wind Tunnel
MWT	Mars Wind Tunnel
NPL	National Physics Laboratory
PAL	Planetary Aeolian Laboratory
PITCH	Angle of attack or vertical angle
PRS	Pressure Sensor
QM	Qualification Model
RCE	Rover Computer Element
RD	Reference Document
REMS	Rover Environmental Monitoring Station
REMS-H	REMS Humidity Sensor
REMS-P	REMS Pressure Sensor
RSM	Remote Sensing Mast
RTD	Resistor Temperature Detector
SZA	Solar Zenithal Angle
TBC	To be Confirmed
TBD	To be defined
UVS	Ultraviolet Sensor
VM	Validation Model
WS	Wind Sensor
YAW	:Horizontal Angle
2D	2 Dimensional

3 REMS REQUIREMENTS

These are the L2 Requirements of REMS in MSL Mission of 2011. To see the complete list of REMS Instrument requirements see AD1. Every REMS requirement is associated to a MSL requirement.

MSLreq	REMSreq	Description
PLD-13	001	REMS shall remotely measure the Ground Temperature from a boom at approximately 1.6 m above the surface at the location of the rover. The temperature measurements should have a range from 150K to 300K and a resolution of 2K. The accuracy should be 10K.
PLD-20	003	REMS shall measure the Ground Temperature at a minimum sampling rate of 1 Hz for at least 5 minutes each hour continuously over the mission.
PLD-139	006	REMS shall measure the Air Temperature around the boom in the Range of 150 to 300K with a resolution of 0.1K and accuracy of 5K.
PLD-20	007	The air Temperature sensor should be at approximately 1.6m above the ground.
PLD-20	008	REMS shall measure the Air Temperature at a minimum sampling rate of 1 Hz for at least 5 minutes each hour continuously over the mission.
PLD-14	010	REMS shall measure the Ambient Pressure in the range of 1 to 1150Pa with a resolution of 0.5 Pa and accuracy of 10 Pa BOL and 20 Pa EOL.
PLD-20	012	REMS shall measure the Ambient Pressure at a minimum sampling rate of 1 Hz for at least 5 minutes each hour continuously over the mission.
PLD-15	014	REMS shall measure the Air Relative Humidity in the range of 0 to 100% with a resolution of 1%RH and accuracy of 10%in the temperature range 203 to 323K
N/A	015	Humidity sensor shall measure directly at the ambient pressure and temperature.
PLD-20	016	REMS shall measure the Air Relative humidity at a minimum sampling rate of 1 Hz for at least 5 minutes each hour, at least during daylight hours, continuously over the mission.
PLD-16	017	The REMS shall be able to measure UV radiation in the following 6 bands (with the maximum measurable irradiances in W/m2): Total dose: 210-360 nm (44.7 W/m2); UVC: 215-277 nm (1.57 W/m2); UVB: 270-320 nm (6.4 W/m2); UVA: 315-370 nm (25 W/m2); UVD 230-298 nm (5 W/m2); UVE 311-343 nm (7.65 W/m2); with a resolution better than 0.5 % of the band maximum measurable irradiance and an accuracy better than 5% of the band maximum measurable irradiance. Those numbers are assuming clean atmosphere (dust free).
PLD-16	018	The UV sensor head shall be accommodated in a place where dust accumulation by rover operations is minimized.
PLD-20	019	REMS shall measure the UV radiation at a minimum sampling rate of 1 Hz for at least 5 minutes each hour, at least during daylight hours, continuously over the mission.
PLD-17	020	REMS UV sensor shall measure radiation coming from a solid angle at least of 60 deg.
PLD-18	022	REMS shall characterize the Horizontal wind of the near surface environment at the rover location, Range: 0-70m/s Resolution: better than 0.5m/s Direction Resolution better than 30 deg Accuracy: better than 30 deg Accuracy better than 1m/s

PLD-20	024	REMS shall measure the Horizontal Wind at a minimum sampling rate of 1 Hz for at least 5 minutes each hour continuously over the mission.
PLD-19	025	REMS shall characterize the vertical Component of the wind of the near surface environment at the rover location. Range:0-20m/sec Resolution better than 0.5m/s Accuracy better than 1m/s
PLD-20	027	REMS shall measure the vertical wind at a minimum sampling rate of 1 Hz for at least 5 minutes each hour continuously over the mission.

Table 3-1 REMS Requirements

4 GENERAL INSTRUMENT DESCRIPTION

REMS is a suite of five sensors: pressure, humidity, air temperature, ground temperature, wind speed and direction and ultraviolet radiation. The instrument architecture is shown in the Figure 4-4 and it consists of four modules: Boom 1, Boom 2, UV sensor and ICU. The two booms are located on the MSL Remote Sensing Mast (RSM), at an angle of 120 deg between them (see Fig. 4-1) in order to correct as much as possible for the RSM perturbations in the wind measurements, also they are at different height to avoid mutual interferences.

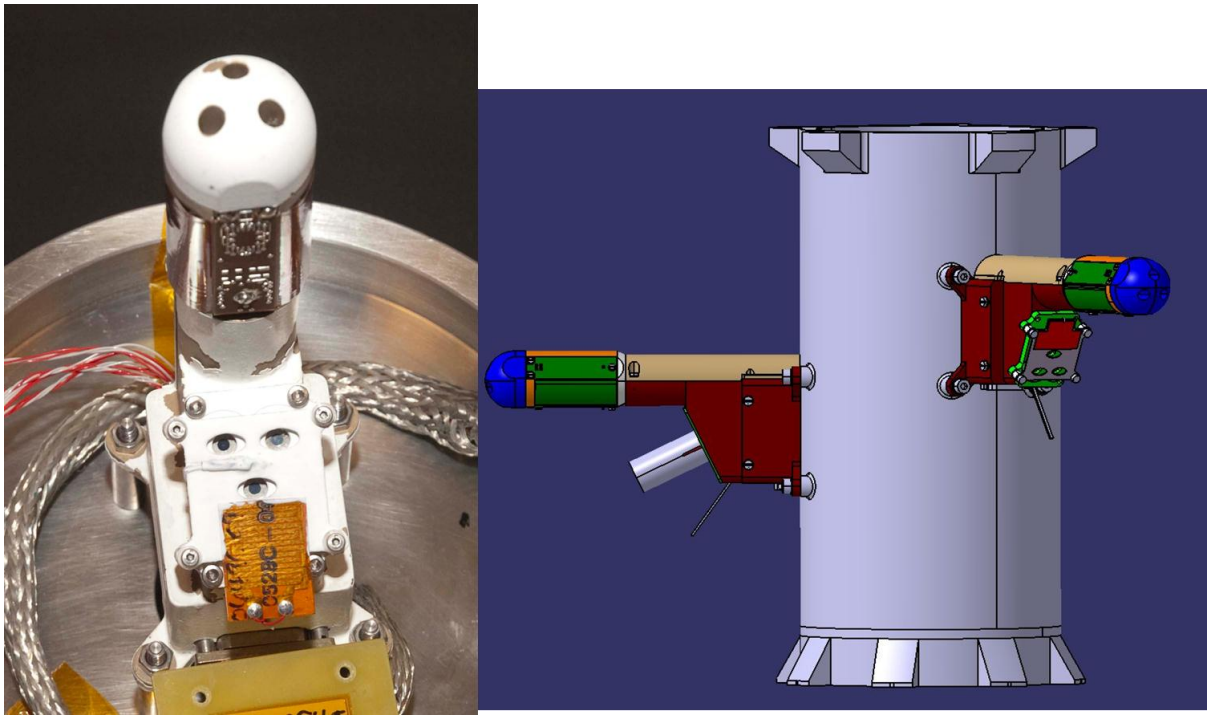

Figure 4-1 (Left) Boom 1 VM with the wind sensor and ground temperature sensor. (Right) Boom1 and 2 position on the RSM.

Booms 1 and 2 are mechanically similar; wind and air temperature sensors are included in both and the Boom 2 has the humidity sensor whilst in Boom1 includes the ground temperature sensor. Figure 4-1 shows a photo of the Boom 1 VM. A more detailed description of both elements can be found in RD1.

The Ultraviolet Sensor (UVS) is composed of 6 photodiodes, which are implemented in a small box (see Fig. 4-2). The sensor will be located on the rover deck, close to the RSM (see RD1 for more details).

The Instrument Control Unit (ICU) hosts the pressure sensor and both will be located inside the rover body. The ICU is in charge of the control and powers all the sensors as well as the communications with the rover computer. Figure 4-2 shows the ICU mechanical configuration and the connectors positions. The pressure sensor (see Fig. 4-3) has a small tube connected with the atmosphere throughout an opening in the rover deck. In order to avoid dust deposition on the pressure tube and to avoid contamination, the opening is close with a small chimney with four small holes and a Hepa filter.

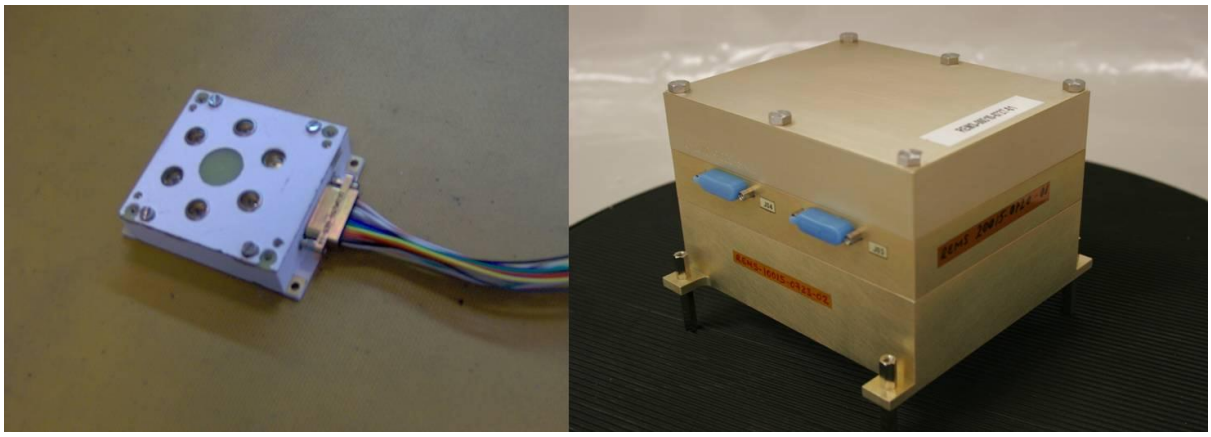

Figure 4-2 (Left) Ultraviolet sensor with the six photodiodes. (Right) ICU external view.

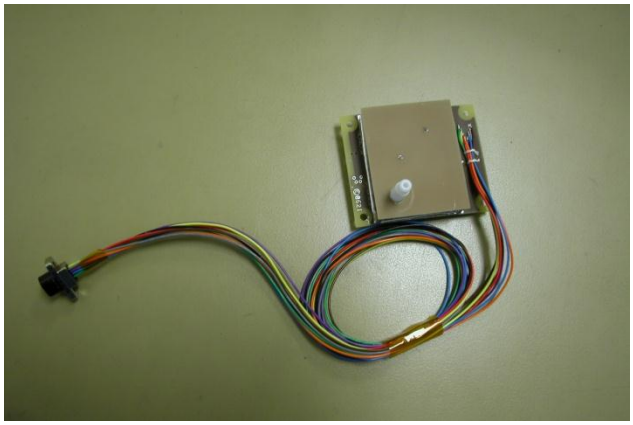

Figure 4-3 PRS tube with protection cover

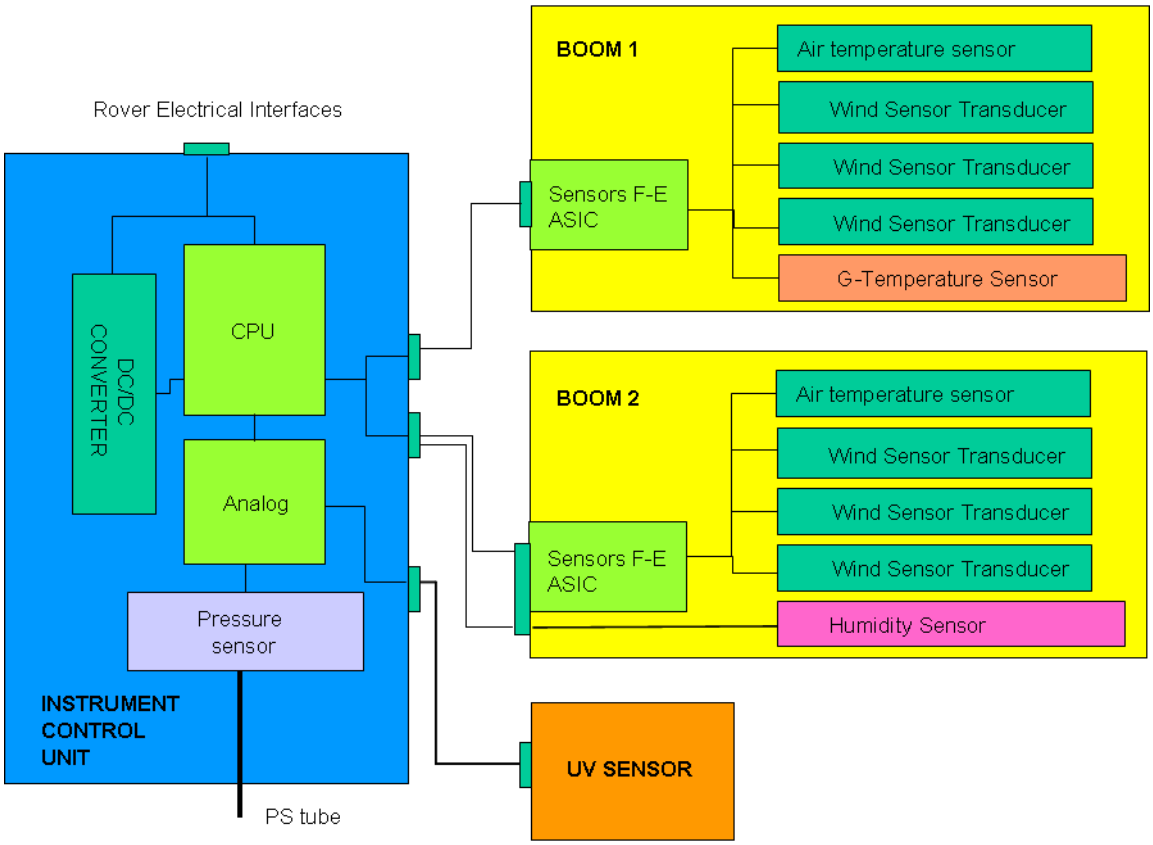

Figure 4-4 REMS Block Diagram

5 SCIENCE OBJECTIVES

REMS scientific investigations will be focused on three areas:

- Micrometeorology. Characterization of the events at small meteorological scales
- Local water cycle. Study the evolution of water in the low atmosphere
- UV radiation. Characterization of the UV radiation levels at surface levels

All those three objectives are quite related with habitability, because they are factors to understand if some habitat could be host microorganisms.

In addition to those goals, REMS measurements could help to validate or correct model predictions at both, global and mesoscales. Mesoscale and synoptic dynamics, global water cycle, local and global dust storms are some of the phenomena which could be monitored with the REMS measurements.

6 REMS CALIBRATION PROCEDURE

This plan will cover the calibration before delivery to ATLO. Each section will describe the period, date and schedule of the tests. Only calibration checks of the HS and PRS are expected during the MSL cruise phase and they are described in this plan (sections 10.1.1.2 and 0). No calibration activities are foreseen during ATLO, only calibration checks.

6.1 CALIBRATION STEPS

Figure 6-1 shows the REMS calibration path, which is composed by the following steps:

1. The thermopiles-filters, the in-flight calibration plate emissivity and the PT1000 temperature sensors are characterized at the CAB. After that the thermopiles will be inserted by CRISA in the metal piece dedicated to allocate them by CRISA, and the rest of calibration tests will be developed at CAB. Finally, CRISA will mount the thermopiles in the Boom 1, and a final end-to-end test will be carried out.
2. The Photodiodes will be calibrated by TECNOLÓGICA. They will be assembled and integrated in the UV sensor by CRISA.
3. HS will be calibrated at FMI. It will be delivered to CRISA and integrated into Boom 2.
4. The PRS will be calibrated by FMI. It will be delivered to CRISA where it will be integrated into the ICU. Calibration checks of the Pressure sensor will be performed at CRISA before and after the environmental tests.
5. Air and Wind Temperature Sensor QM and FM will be functionally tested in CRISA to assure equivalent behaviour. QM will be calibrated in CAB/Oxford/Aarhus Facilities after FM delivery.

Once the instrument is totally assembled a set of functional tests will be performed to validate the instrument performance.

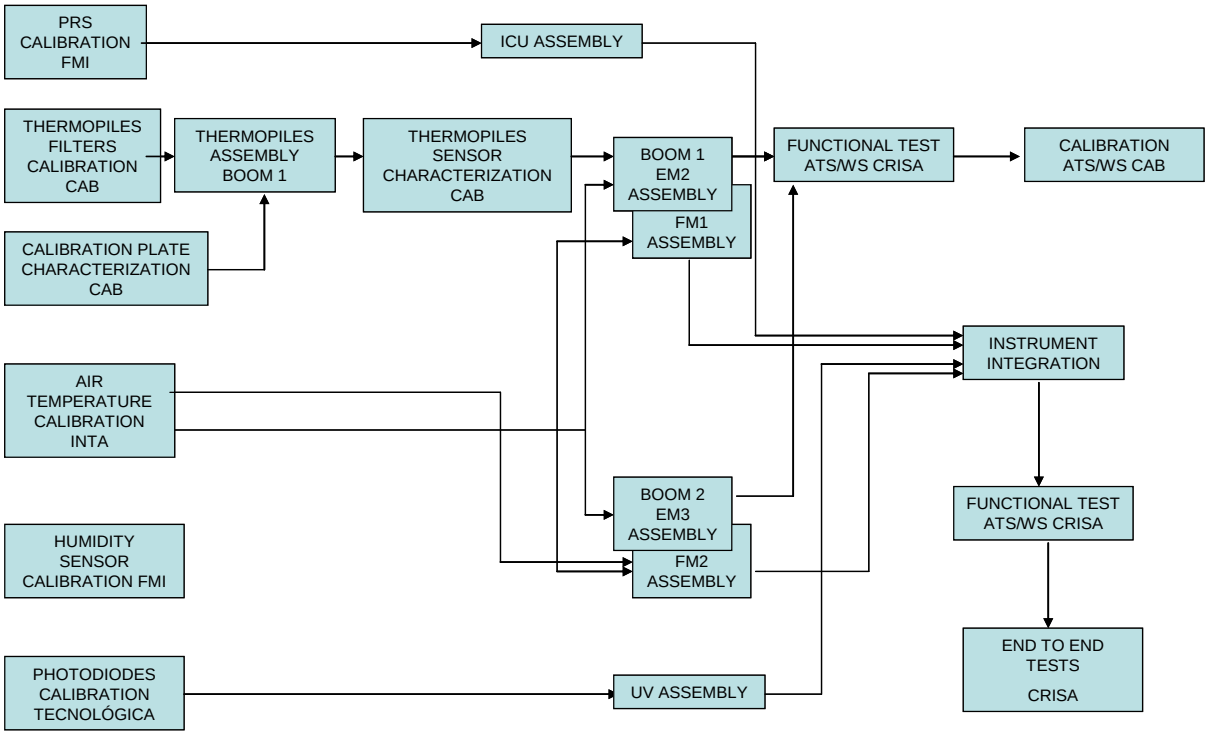

Figure 6-1 REMS Calibration Procedure

7 GT SENSOR CALIBRATION

The GTS of the Boom 1 FM and QM will be submitted to a set of calibration tests explained in this calibration plan.

The primary goal of calibration and testing of the GTS is to verify that the instrument will meet or exceed all the relevant L2 requirements of REMS in MSL Mission. This means mainly to justify the capability of the system to remotely measure the ground temperature in a range from 150K to 300K, and from a boom at approximately 1.6 m above the surface at the location of the rover, achieving a resolution of 2K and an accuracy of 10K.

Therefore, the purpose of this plan is to define a consistent method to calibrate the GTS by defining or referencing the methods and types of tests to the functional requirements. This plan also includes a test sequence, so that verification of requirements and model identification take place in a systematic and understandable way. The tests described in this plan will provide the data required to clearly understand the accuracy, precision, and limitations of the GTS tests.

As a result the primary objective of these tests will be to determine: (1) Thermopiles filter characterization; (2) flight calibration plate emissivity determination; (3) Pt1000 temperature sensors characterization versus temperature; (4) Thermopiles characterization versus temperature; (5) Ground relative field of view; (6) Calibration of the initial value of GTS gain; (7) Calibration of thermopiles thermal gradient constant. In addition to these calibrations, a series of tests will be performed under ambient and/or vacuum and Martian atmosphere conditions to verify instrument functional performance, including end-to-end tests and the command and data link.

In order to facilitate the understanding of the calibration process, the thermopiles mathematical model, as well as the in-flight calibration algorithm will be described.

7.1 TEST CONDITIONS AND OVERVIEW

7.1.1 GTS Description

The GTS is dedicated to measure the temperature of the Martian surface, integrating the IR energy coming from the ground. To that end, the GTS uses three infrared detectors that measure the emitted thermal radiation in three different IR spectral bands. The detectors focus in a large surface area of around 100^2m, whose orientation has been selected in order to minimize the rover influence. Therefore, the average temperature of this area will be measured avoiding local effects, as in Figure 7-1.

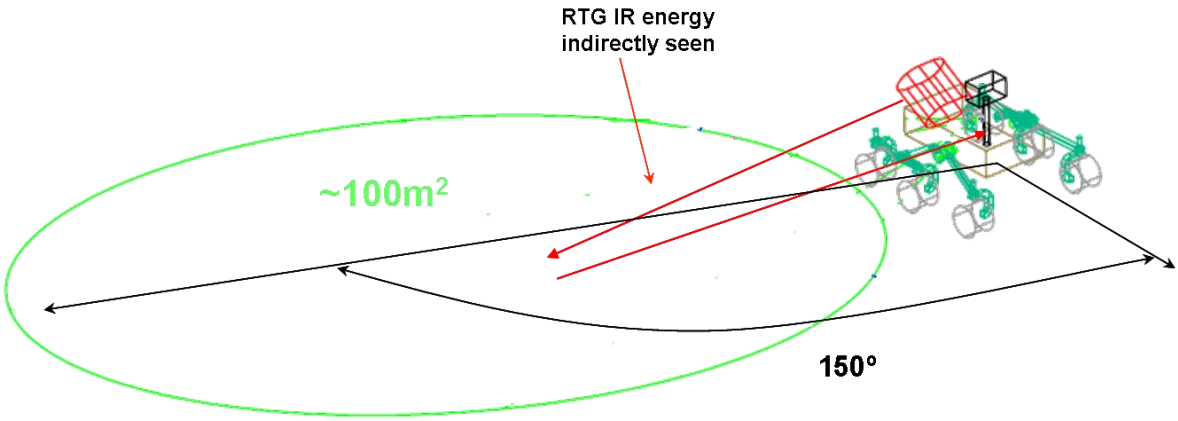

Figure 7-1 Mars surface area seen by the GTS

The selected infrared detector is a thermopile. These sensors have the advantage that they can work at almost any operational temperature, are small, lightweight and comparatively cheap, as well as sensitive to all the infrared spectra. Taking into account the restricted resources available for the REMS, there is hardly any alternative to thermopiles. However, thermopiles are not standard parts for space or military applications. Therefore, at present no formally space qualified thermopile sensors exist. It should be noted here, that the IRTM experiment on the VIKING mission and the MUPUS experiment of the ROSETA mission have proven the suitability of this kind of detector to measure low object temperatures under space conditions.

The GTS will measure the radiation emitted by Martian surface in three infrared wavelength windows, by using three detectors (one of them is redundant), looking directly to the ground without any optical system. The selected measurement channels of the thermopiles are 8-14µm, 15.5-19µm and 14.5-15.5µm. These channels try to minimize the influence of solar radiation. Also, combining the output signal of the three channels, the errors due to ground emissivity uncertainty and atmospheric CO_2 absorption and emission will be constrained. The selected thermopiles are the model IPHT TS-100 as shown in Figure 7-2, which include a RTD Pt1000 sensor and a filter built to the specification and pre-bonded onto them as the thermopile window.

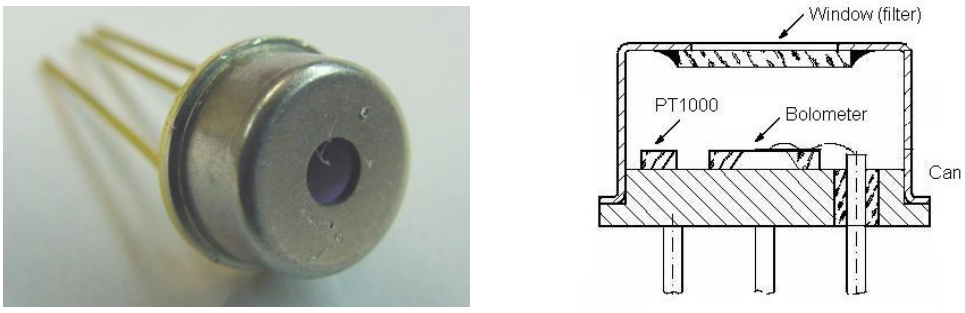

Figure 7-2 Thermopile Housing

The thermopiles are mounted inside the Boom1 as shown in Figure 7-3. The boom has the form of a small arm of 150mm long, and it also hosts the electronics dedicated to amplify the thermopiles signal. The thermopiles are allocated and glued to an aluminium piece (Figure 7-2), dedicated to host them and that is screwed to the boom. This piece is used as a thermal mass to ensure an acceptably

low drift in thermopiles temperature, and its shape allows to avoid the existence of lateral lobules in the thermopile FOV (field of view), minimizing the rover direct vision.

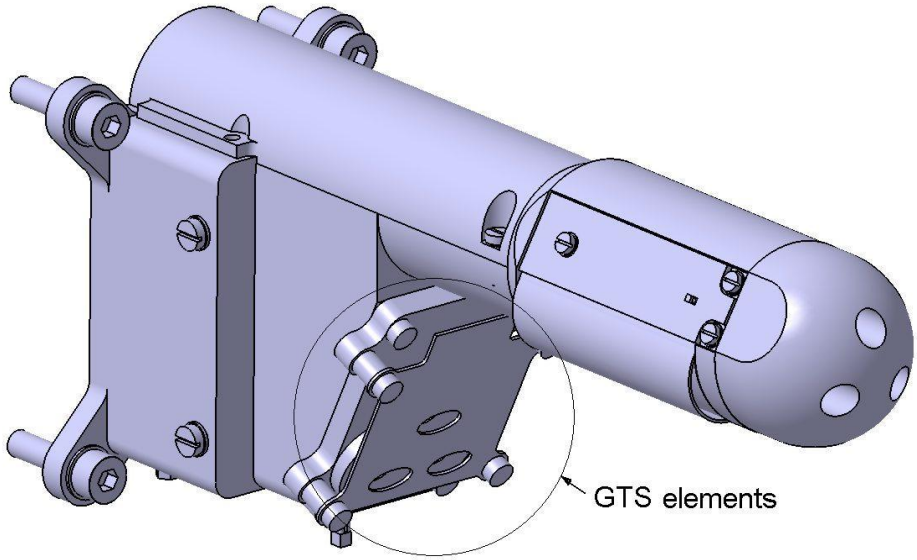

Figure 7-3 Boom 1 General View

The GTS includes an in-flight calibration system whose main goal is to compensate the detector degradation due to the deposition of dust over its window at Mars. The system is implemented, without moving parts, by a thin and low mass plate of aluminium coated with high emissivity paint. This plate is placed in front of each detector, so each detector looks at the ground through a hole in the plate. It is shown in Figure 7-4. In this way the part of the FOV obstructed by the calibration system is an annulus, limiting the measurement solid angle, and helping also to minimize looking directly into rover parts. The calibration plate is heated at our choosing by an electrical resistor glued to its external surface, and its temperature is measured by means of a RTD Pt1000 sensor glued also to its surface.

Based on the calibration plate position, little dust deposition is expected over the inward side of it. Nevertheless, as the emissivity of the calibration plate paint is selected to be high and the emissivity of the dust is also high, a small amount of dust over this surface should not modify by much the performance of the system.

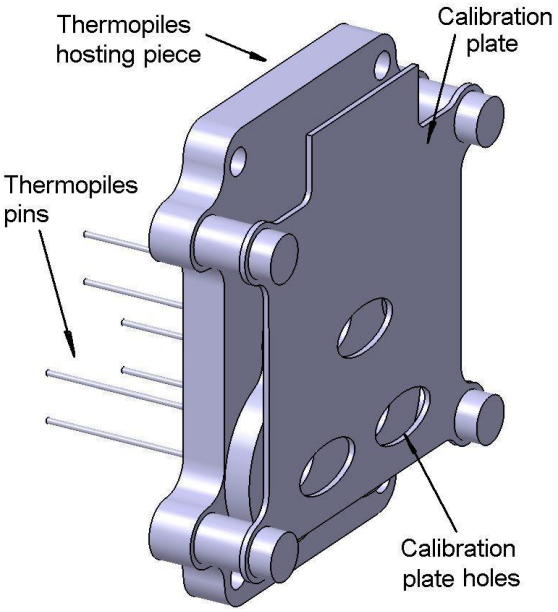

Figure 7-4 GTS Hosting Piece and calibration Plate General View

7.1.2 Thermopile Description and Model

7.1.2.1 Thermocouples Equation

The thermopile output is produced by a voltage representation of the temperature difference between the instrument substrate (can) and a bolometer, which is in radiative balance with a target (the ground). In the case of the selected thermopiles output voltage is obtained due to the conversion carried out by a set of 100 thermocouples connected in series and embedded between the substrate and the bolometer.

Each thermocouple has an output voltage *V* as a result of the temperature difference between the hot (bolometer) and the cold (can) junctions like:

$$V = f(T_c)(T_s - T_{cb})$$

Where T_{cb} is the temperature of the thermopile can base, T_s is the temperature of the bolometer, and $f(T_{cb})$ is a function that represents the sensibility of the thermopile. The function $f(T_{cb})$ can be approximated by a polynomial expression. In the case of the thermopiles that we are using the function $f(T_{cb})$ follows the expression provided by the manufacturer:

$$f(T_c) = -88.86\text{x}10^{-4} + 3.057\text{x}10^{-4} \cdot T_{cb} - 0.01526\text{x}10^{-4} \cdot T_{cb}^{2} + 3.366\text{x}10^{-9} \cdot T_{cb}^{3} - 2.788\text{x}10^{-12} \cdot T_{cb}^{4} \quad (1)$$

Thus, for a set of 100 thermocouples:

$$V_{out} = 100 \cdot f(T_{cb})(T_s - T_{cb}) \quad (1)$$

Using this equation the value of the bolometer temperature T_s can be obtained from the temperature measurement of the thermopile can T_{cb}, and thermopile output voltage V_{out}.

7.1.2.2 Energy Balance Equation

The energy balance equation takes into account all the heat fluxes that come into the thermopile bolometer from all the bodies around it. As the bolometer is designed to be well insulated from the can and to have low thermal mass, the thermal equilibrium condition is reached after a few milliseconds. The equation considers a simplified model of energy exchange by thermal radiation (Q_R) and conduction and convection (Q_C), as illustrated in Figure 7-5.

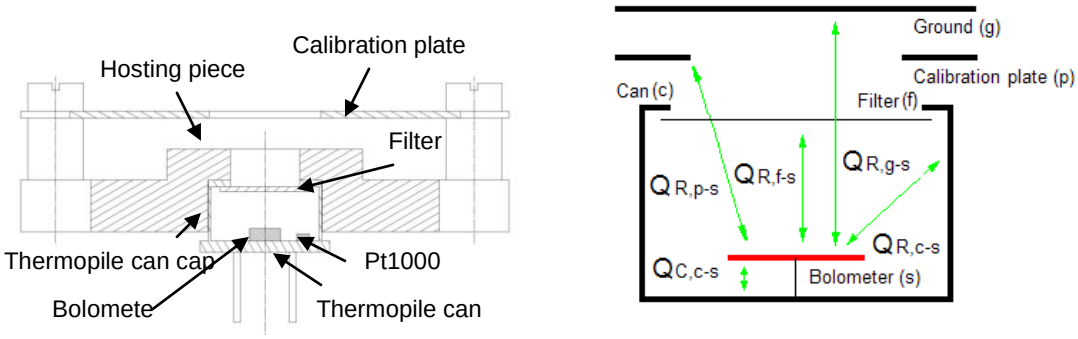

Figure 7-5 (a) Real schematic diagram of REMS GTS, (b) Simplified thermal diagram of sensor exchanged heat power.

From the analysis of the energy terms, equation (2) represents the thermal circuit after thermal equilibrium is reached,

$$Q_{R,g-s} + Q_{R,p-s} + Q_{R,f-s} + Q_{R,cc-s} + Q_{C,cb-s} = 0 \qquad (2)$$

where

$$Q_{R,g-s} : Radiation \quad between \quad ground \quad and \quad bolometer$$
$$Q_{R,p-s} : Radiation \quad between \quad calibration \quad plate \quad and \quad bolometer$$
$$Q_{R,f-s} : Radiation \quad between \quad filter \quad and \quad bolometer$$
$$Q_{R,cc-s} : Radiation \quad between \quad can \quad cap \quad and \quad bolometer$$
$$Q_{C,cb-s} : Conduction - convection \quad between \quad can \quad base \quad and \quad bolometer$$

Based on simplified radiation and conduction heat flux models, equation (2) can be expressed as,

$$0 = \alpha \cdot K_1 \cdot \left(E_g^I - E_s^I\right) + (1-\alpha) \cdot K_1 \cdot \left(E_p^I - E_s^I\right) + K_2 \cdot \left(E_f^O - E_s^O\right) + K_3 \cdot \left(E_{cc}^T - E_s^T\right) + K_4 \cdot \left(T_{cb} - T_s\right) \qquad (3)$$

where α is the factor that represents the portion of the thermopile FOV no obstructed by the flight calibration plate, and K_1, K_2, K_3 and K_4 are constants which modulate the weight of the different terms. These constants depend on physical factors of the surrounding bodies:

1. Area of the bolometer A_s
2. Field of view factors of the transducer surface F_{s-x}
3. The effective thermal conductivity between the bolometer and the can base λ_e

4. The effective section and length of the materials between the bolometer and the can base d_e and A_e

5. The convection coefficient of the thermopile inner atmosphere h_c, supposing this atmosphere is at can base temperature

A theoretical and simplified analysis of the value for these constants concludes that:

$$\alpha \cdot K_1 = A_s \cdot F_{s-g} \quad (1-\alpha) \cdot K_2 = A_s \cdot F_{s-p} \quad K_3 = A_s \cdot F_{s-c} \quad K_4 = \lambda_e \cdot \frac{A_e}{d_e} + 2 \cdot h_c \cdot A_s$$

And the energy terms E_x^y are calculated based on Planck law, and they depend on the bodies' temperature T_x. The temperature of the calibration plate and the thermopiles will be measured using individual RTD Pt1000 sensor's glued to these elements, while the temperature of the bolometer will be determined from the thermopile output voltage.

$$E_g^I = \in_g \int_{\lambda a}^{\lambda b} T_f(\lambda) \frac{2hc^2}{\lambda^5 \cdot \left(e^{hc/\lambda K T_g} - 1 \right)} d\lambda \quad E_{cc}^T = \int_0^{\infty} \frac{2hc^2}{\lambda^5 \cdot \left(e^{hc/\lambda K T_C} - 1 \right)} d\lambda \quad E_s^T = \int_0^{\infty} \frac{2hc^2}{\lambda^5 \cdot \left(e^{hc/\lambda K T_S} - 1 \right)} d\lambda$$

$$E_p^I = \int_{\lambda a}^{\lambda b} \in_p (\lambda) \cdot T_f(\lambda) \frac{2hc^2}{\lambda^5 \cdot \left(e^{hc/\lambda K T_p} - 1 \right)} d\lambda \quad E_s^I = \int_{\lambda a}^{\lambda b} T_f(\lambda) \frac{2hc^2}{\lambda^5 \cdot \left(e^{hc/\lambda K T_S} - 1 \right)} d\lambda \quad E_s^O = E_s^T - E_s^I$$

$$E_{cc}^I = \int_{\lambda a}^{\lambda b} T_f(\lambda) \frac{2hc^2}{\lambda^5 \cdot \left(e^{hc/\lambda K T_C} - 1 \right)} d\lambda \quad E_{cc}^O = E_c^T - E_c^I$$

where the subscript *x* represents the body, *g* (ground), *p* (calibration plate), *f* (filter), *cc* (thermopile can cap), *cb* (thermopile can base) and *s*(bolometer). ε_g, $\varepsilon_p(\lambda)$ and $T_f(\lambda)$ are the ground emissivity, the calibration plate and the transmittance of the filter respectively. And the superscript *T*, *I* or *O* denotes if the energy flux is calculated in the total spectra, within the filter window, or out of the filter bandpass respectively. As it is derived from the expressions, the filter's transmittance response and calibration plate emissivity must be known in order to calculate these energy terms.

Two simplifications can be assumed in equation 3. First, the filter temperature is supposed to equal the temperature of the thermopile can cap, this is reasonable because:

1. Both are in good thermal contact, using glue with high thermal conductivity and increasing as much as possible the contact area.
2. The thermal conductivity of silicon and germanium, which are the substrate materials of the filters, are 148 and 59.9W/(m·K), not very low.
3. The filters are mounted in a position such that the side that has a higher reflectivity is looking outwards, avoiding the heating of the filter, due to external radiation.
4. There is not a specific sensor dedicated to sample the temperature of the filter, therefore the most reliable temperature of the filter is that obtained from the can.

And second, the factor that weights the filter influence is equal to the factor of the ground, as they share the same field of view. In this way equation 3, can be rewritten

$$0 = \alpha \cdot K_1 \cdot \left(E_g^I - E_s^I\right) + (1-\alpha) \cdot K_1 \cdot \left(E_p^I - E_s^I\right) + K_1 \cdot \left(E_{cc}^O - E_s^O\right) + K_2 \cdot \left(E_{cc}^T - E_s^T\right) + K_3 \cdot \left(T_{cb} - T_s\right) \qquad (4)$$

7.1.2.3 In-flight Calibration Algorithm

While operating on Martian conditions, the main origin of thermopile degradation is dust deposition. During landing process and subsequently during operation dust will be collected on the thermopile's filter. Therefore, it is important to define an in-flight calibration algorithm, whose main objective is to cope with this problem.

The algorithm described here for the GTS has been taken from MIDAS (RD2), and adapted to the thermopile model peculiarities.

Dust has high emissivity and will block light into and out the detector. After dust has been deposited over the filter, it is in contact with it and acquires its same temperature. As a result, It can be seen a changing of the area of the filter into something similar to the can. In other words, if the factor *β* represent the part of the FOV that has not been obstructed by the dust, equation (4) can be rewritten,

$$\begin{aligned} 0 = \beta\cdot\alpha\cdot K_1\cdot\left(E_g^I - E_s^I\right) + \beta\cdot(1-\alpha)\cdot K_1\cdot\left(E_p^I - E_s^I\right) + \beta\cdot K_1\cdot\left(E_{cc}^O - E_s^O\right) \\ + (1-\beta)\cdot K_1\cdot\left(E_{cc}^T - E_s^T\right) + K_2\cdot\left(E_{cc}^T - E_s^T\right) + K_3\cdot\left(T_{cb} - T_s\right) \end{aligned} \tag{5.1}$$

$$\begin{aligned} 0 = \beta\cdot\left[\alpha\cdot K_1\cdot\left(E_g^I - E_s^I\right) + (1-\alpha)\cdot K_1\cdot\left(E_p^I - E_s^I\right) + K_1\cdot\left(E_{cc}^O - E_s^O\right) - K_1\cdot\left(E_{cc}^T - E_s^T\right)\right] \\ + \left(K_1 + K_2\right)\cdot\left(E_{cc}^T - E_s^T\right) + K_3\cdot\left(T_{cb} - T_s\right) \end{aligned} \tag{5.2}$$

Therefore, *β* must be determined during operations. This can be done by varying the temperature of the calibration plate. The temperatures of the thermopile, calibration plate, as well as the output voltage of the thermopile must be collected before and after temperature changes. As a restriction for this calibration process, the ground temperature must be stable during all the heating process, which means that the best moment for carrying out the calibration is just before dawn. Finally, using the collected data and the equations (5), the system of equations (6) can be defined.

$$0 = \beta\cdot\left[a\cdot E_g^I + b\cdot E_{p1}^I + c_1\right] + d_1 \tag{6.1}$$

$$0 = \beta\cdot\left[a\cdot E_g^I + b\cdot E_{p2}^I + c_2\right] + d_2 \tag{6.2}$$

where the constants a and b take the value $\alpha\cdot K_1$ and $(1-\alpha)\cdot K_1$ respectively. And c and d are a set of known energy terms for two different temperatures of the calibration plate, and whose values are: $c = -K_1\cdot E_s^I + K_1\cdot\left(E_{cc}^O - E_s^O\right) - K_1\cdot\left(E_{cc}^T - E_s^T\right)$ and $d = K_1\cdot\left(E_{cc}^T - E_s^T\right) + K_2\cdot\left(E_{cc}^T - E_s^T\right) + K_3\cdot\left(T_{cb} - T_s\right)$. Finally, the system can be solved for the factor *β*,

$$0 = \beta\cdot\left[b\cdot\left(E_{p1}^I - E_{p2}^I\right) + c_1 - c_2\right] + d_1 - d_2 \tag{7.1}$$

$$\beta = \frac{d_2 - d_1}{b\cdot\left(E_{p1}^I - E_{p2}^I\right) + c_1 - c_2} \tag{7.2}$$

The value of *β* is completely defined and depends on some terms that can be calculated from the values of the temperatures that have been collected.

An important consideration is that the value of β is not only affected by the deposition of dust, it also determined by the global sensitivity of the GTS. So, parameters such us the thermopile sensitivity, and ASIC channels gain modify its value, if they change.

A consequence of the GTS calibration plate heating is that there is a thermal gradient originated in the whole GTS and more specifically in the thermopiles. The calibration plate, as it is shown in Figure 7-5, is allocated very close to the thermopiles hosting piece, being screwed to this. Thus, there is a thermal coupling, based on conduction and radiation between these two pieces and by extension with the thermopiles. In this way, a thermal gradient appears between the thermopiles can cap, the top part, and the base or the bottom part, generating a small temperature difference. From this fact, a relation between the over temperature of the calibration plate, and the temperature difference between the thermopile can base and cap can be established (8). This relation is assumed to be lineal throughout $K_{p\text{-}c}$, since from previous test results there is no a dependence of $K_{p\text{-}c}$ of ΔT_p, validating the lineal model of the thermal gradient.

$$T_{cc} - T_{cb} = K_{p-c} \cdot \Delta T_p \tag{8}$$

7.2 GENERAL PROCESS FOR THE ENERGY BALANCE EQUATION CONSTANTS IDENTIFICATION

The main priority regarding calibration tests of the GTS will be centered on the absolute calibration of the thermopiles detectors. This means to identify those unknown constants of the energy balance equation K_1, K_2, K_3, α , β and $K_{p\text{-}c}$.

First the identification of the constants K_1, K_2 and K_3 will be accomplished. The process requires removing the calibration plate, making α equal to 1 and testing the system for different target (blackbody source) and thermopile temperatures. For the whole set of temperatures the energy terms in the energy balance equation can be calculated, and with these data a least-square problem can be posed. Finally, the problem is solved and the values of K_x that minimize the least-square error are obtained.

After obtaining the value of the constants K_1, K_2 and K_3, the goal is to identify the portion of the thermopile FOV obstructed no-obstructed by the flight calibration plate, this is α. For it identification the calibration plate is required. During the identification of α, the thermopile and the calibration plate must be kept at ambient temperature, in order to ensure that their temperatures are homogeneous and stable, minimizing or neglecting the value of the heat flux coming from the calibration plate. The test procedure consists on setting different blackbody temperatures over the ambient. Therefore, the energy balance equation can be solved for the value of α.

The value of β will be obtain on Mars, during operations, using the differential process described in the previous section. Nevertheless, its initial value will be calculated as part of the calibration campaign to provide the first operational value. In summary, the test consists on setting different temperatures for the blackbody, while the thermopiles temperature remains stable at ambient conditions (without thermal gradients). Thus, from the equation (5.2) a differential system of equations can be defined for two different blackbody temperatures, and finally the system can be solved for the value of β. This value must be unique, and it is computed as an average of the individual data for each couple of blackbody temperatures.

Finally, the value of $K_{p\text{-}c}$ must be identified. This is to establish a relation between the temperature increment of the calibration plate and the thermal gradient originated between the thermopile's can cap and the base. The test mainly consist on setting an over temperature for the calibration plate, using for that the associated heater, while the temperature of the blackbody remains constant and the temperature of the thermopiles change freely due two the heat coming from the calibration plate. This procedure pretends to emulate the appearance of thermal gradients in the thermopiles' can during operation. Thus, a differential analysis of the energy balance equation for temperatures before and after the calibration plate heating process allows obtaining the value of $K_{p\text{-}c}$.

To solve the energy balance equation a differential procedure is applied. The procedure combines two energy balance equations for pairs of blackbody or calibration plate temperatures with the same thermopile temperature. The objective of the differential analysis is to avoid the errors derived from the general test set-up, see Figure 7-6, in which the thermopiles will be allocated inside a cryostat and looking at the blackbody source throughout the KRS-5 window. These errors are:

1. The environment reflections due to the blackbody emissivity is not big enough as to neglect the influence of the bodies around it
2. The IR window emission and transmittance.

In this way some unknown energy terms appear in the energy balance equation (4), converting it into,

$$0 = \alpha \cdot K_1 \cdot \left(T_w E_g^I + E_w^I + E_{reflexions}^I - E_s^I\right) + (1-\alpha) \cdot K_1 \cdot \left(E_p^I - E_s^I\right) + K_1 \cdot \left(E_{cc}^O - E_s^O\right) + K_2 \cdot \left(E_{cc}^T - E_s^T\right) + K_3 \cdot \left(T_{cb} - T_s\right) \quad (9)$$

where T_w is the transmittance of the IR window versus wavelength, E_w^I is the energy emitted by the IR window, and $E_{reflexions}^I$ is the energy reflected in the blackbody source coming from the environment. A detailed analysis and description of this differential procedure is described in each particular calibration test section. The general test set up is shown in Figure 7-6.

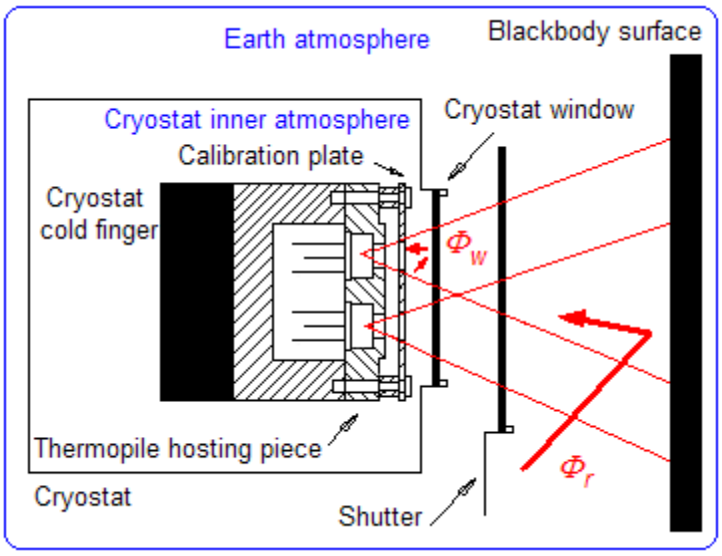

Figure 7-6 Test General Set-up

The temperature of the blackbody source must be selected in order to simplify the test facilities, as well as to have a good signal to noise ratio in the measurements. One of the restrictions to be considered here is that the blackbody source temperature must be as low as possible in order to avoid the heating of the elements around it, such as the cryostat or its IR window. Therefore, in general the tests will be performed at blackbody source temperatures from 313K to 403K with intervals of 20K, which will allow us to plan the differential analysis.

7.2.1 Temperature Dependence

The GTS will have to operate at any temperature within the operational range defined as between 138K and 313K. From the analysis of the energy balance equation, it can be said that the values of the equation constants, K_1, K_2 and K_3, are independent of the thermopile temperature. Nevertheless, minor changes can be expected, for several reasons:

1. The mathematical model for the thermopile is a simplification of the real one. And the model does not have into consideration the whole energy exchange effects inside the thermopile.
2. The thermopile filter transmittance will change when operating at other than room temperature. A drift is expected in the cut-on frequency. In order to limit this effect, the filter response versus its temperature will be previously characterised.
3. The effective emissivity of the different elements could slightly change depending on their temperatures.
4. Thermopile filter temperature is supposed to be equal to the can temperature. This is a common and good approximation, but it does not represent the real circumstances, in which there will be a small difference in these bodies temperature.

For this reason, calibration across several points of the GTS operational range should be sufficient for characterization purposes. The only constrain is the rate of temperature variation, which must be limited to protect the live of the whole system as well as the different elements (sensors, filters, glue, etc…)

7.3 MAIN TESTS FACILITIES

Before starting with the description of each test, a sort review of the facilities is presented.

7.3.1 Thermal Vacuum Chamber

The GTS will be tested and calibrated in vacuum and Martian atmosphere conditions at CAB chambers, with GTS temperatures that range from 123K to 313K. These temperature values agree with the working temperatures expected for the thermopiles during operation.

In order to achieve these test conditions a vacuum and thermal chamber is used. The thermal chamber used to carry out the test is the JANIS cryostat JC100, Figure 7-7. The GTS, located at the cryostat cold finger, will be looking at the reference blackbody source, which is outside the testing chamber, through an IR transparent window made of KRS-5 material. The transmission properties of this window, this is the transmittance versus wave length from 6μm to 35μm, will be characterised. The result of this characterization will be included as part the calibration plan results.

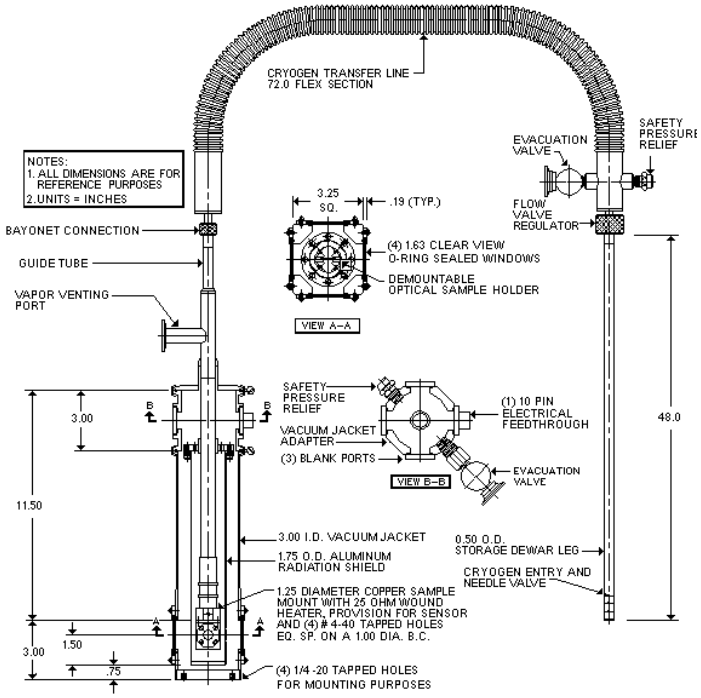

Figure 7-7 JANIS JC100 Cryostat

This cryostat, using a thermal control system, is capable of achieving the range of operational temperatures of the mission at the cold finger, with a temperature stability of 0.1K under vacuum conditions. Therefore, the thermopiles, or more exactly the piece in which they are inserted, are allocated in good thermal contact with the cold finger of the cryostat, using a sample holder. The cold finger temperature, used to close the control loop, is measured by means of a silicon diode, while the thermopiles temperature is sampled using its own previously calibrated Pt000 sensor. In Table 7-1 are shown the specifications of the cryostat.

Specification	**(Sample in Vacuum 10^{-3} mbar)**	**(Sample in Vapor)**
Temperature Range	<2-325K	1.5-325K
Initial Cooldown Time	15minutes	15 minutes
Nominal Temperature Stability (with controller)	50 mK or less	50 mK or less
Orientation	any position	vertical for < 4.5 K
System Weight (without transfer line)	10 lbs (4.6 kg)	15 lbs (6.8 kg)
Cryogen Consumption on Cooldown	0.4L LHe (325-4.2 K) 0.1L LN_2 (325 - 77 K)	0.5L LHe (325 - 4.2 K)
Nominal Cryogen Consumption Rate	0.5 L/Hr LHe (5 K) 0.1 L/Hr LN_2 (100 K)	1.1 L/Hr LHe (5 K)

Table 7-1 Cryostat specifications

Additionally, the cryostat is capable of working with a certain atmosphere inside the testing chamber, of course at the expense of increasing the LN2 (Liquid Nitrogen) consumption. Under this working conditions the atmosphere inside will reach a temperature different from the temperature of thermopiles.

As the blackbody source is outside the vacuum chamber, there is a column of earth atmosphere between the IR window and this blackbody source. Nevertheless, the influence of the column radiance and absorbance during the calibration process, mainly caused by the CO_2 at the 15μm absorbance band, will be neglected due to its low optical thickness.

7.3.2 FT-IR Spectrometer

Some tests of the calibration plan, as well as others necessary for sensors and equipment characterization, require the use of an IR spectrometer. For example it is necessary to know, as part of the calibration plan, the transmittance of the thermopiles filters and the reflectivity of the calibration plate. Additionally, it is also necessary to characterize the transmittance of the KRS-5 cryostat window, and the reflectivity of the thermopiles filters.

The equipment used for this task is the Nexus 670 FT-IR Spectrometer (Figure 7-8), which is part of the facilities at Planetary Geology Laboratory in the Centro de Astrobiología. This equipment allows us to carry out transmittance and reflectivity analysis in different IR bands, changing the detector and the beamsplitter. Specifically, in the case of the test associated to the REMS GTS the band 6μm to 25μm is covered by using a beamsplitter of XT-KBr and a detector of DTGS/KBr, while the band 20μm to 40μm is covered by using a beamsplitter of Solid Substrate and a detector of DTGS/KBr.

The way in which the equipment is normally operated consists of carrying out a background test or a calibration before each test is started. For the case of transmittance analysis the calibration activity consists of analysing which is the maximum signal versus wavelength before introducing the sample to tests, and after that analysis which is the signal lost versus wavelength, once the sample to test has been introduced.

In the case of the reflectivity analysis, obtaining the background is similar, since the reflectivity of an ideal mirror is compared with the reflectivity of the sample being testes. Additionally, for the case of the reflectivity it is necessary to focus the sample and the mirror. This focus is ensured trying to maximize the value of a reflected signal over the sample.

The goodness of the calibration or background test procedure determines the accuracy in the transmittance and reflectivity. Based on previous experience it is simple to achieve an error smaller than 1% for the transmittance and around ±1%, always with a wavelength resolution of ±20nm.

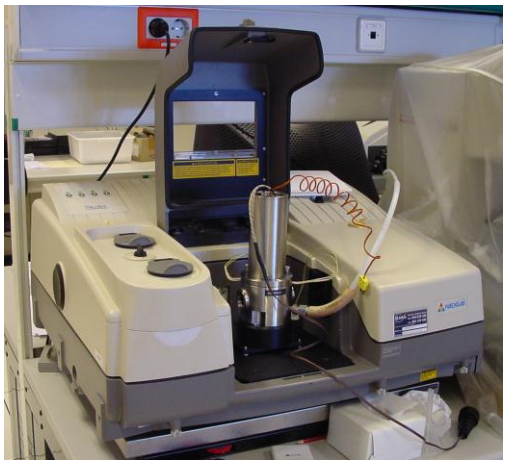

Figure 7-8 NEXUS FT-IR Spectrometer General View

7.3.3 Reference Blackbody Source

A precision calibration reference blackbody will be used as a calibrated source of IR energy. This is the commercial large area blackbody source M315X of 8” diameter (Figure 7-9), manufactured by the company MIKRON. The blackbody uses a precision platinum RTD and a digital PID controller. The calibration process has been carried out under laboratory environmental conditions, using a radiometric method, which ensures the temperature homogeneity of the emitting surface. The calibration certificate of the instrument is provided by the manufacturer.

Figure 7-9 MIKRON M315X Blackbody Source General View

These are some of the most important characteristics of the blackbody: The surface spectral emissivity has been performed by NIST (National Institute of Standards and Technology), and is provided by the manufacturer over the whole GTS characterized wavelength range. The controller permits to reach temperatures from 293K to 673K, and the blackbody short term stability error is ±0.1K for an 8 hour period.

A thermometric method will be used to measure the real temperature of the blackbody emitting surface. The method uses an ultra precision platinum RTD that closely monitors the temperature of the emitting surface. A deep hole with 3.5mm diameter is provided for customer insertion of the calibrated RTD. Knowledge of emitter emissivity characteristics, provided by the manufacturer, is needed for correct radiated energy computation. Using this method an accuracy over 20mK can be reached, in the temperature of the surface.

More exactly, the sensor used is a PT100 1/5 DIN tolerant element and 4 wire connection manufactured by LABFACILITY Temperature & Process Technology. This Pt100 has been previously

calibrated at INTA facilities in the Metrological and Calibration Department, in an isothermal chamber following the recommendations of EIT-90. The calibration certificate will be included as part the calibration report. A four wire method will be used to measure the resistance value of the Pt100 sensor during calibration.

7.3.4 Test set-up to calibrate the initial value of β

This set-up permits to allocate the blackbody MIKRON M315X in front of the REMS Boom1, in such way that the thermopiles FOV will be completely covered by the calibrated surface, as it is require for the test GT_6. The blackbody will be mounted over a sliding rail in order to retreat it during temperature stabilization periods, and bring it closer to the Boom 1 during measuring periods. The objective of these movements is to avoid the heating of the Boom1 due to the closeness of the radiant surface. Additionally, and despite this is not shown in Figure 7-10 GTS measurement capabilities test mechanical layout
, a thermal shield will be located in between the blackbody and the Boom 1 in the retreat position with the same objective. The sliding rail is assembled in a support structure, making the whole test platform stable.

The REMS Boom 1 will be screwed to what is called the boom support plate. This is a metallic piece designed to allow the thermopiles to see the blackbody radiant surface with an angle of cero degrees, minimizing the size of the blackbody.

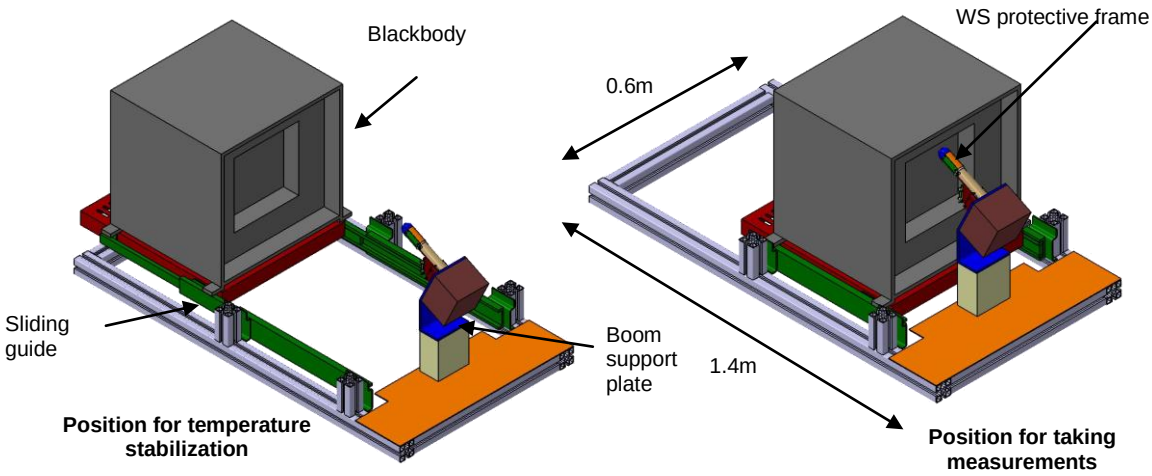

Figure 7-10 GTS measurement capabilities test mechanical layout

7.3.5 Discharge Facility Chamber

The CO2 discharge facility is a chamber in which Martian like atmosphere conditions (pressure and composition) are recreated. It consists on a 200 mm diameter aluminum tube 350 mm in length which has two stainless steel ends which close with orings. One of the ends of the chamber is prepared so the boom can be mechanically and electrically attached without loosing the inner atmosphere conditions. The electrical connection is achieved by a MDM connector with 25 pins. This facility is required for running the test GT_7.

The chamber uses a pump in order to control the pressure inside, removing the excess of air. Additionally, a swagelok regulator is used in order work to in both static and dynamic modes. For different pressures inside without the existence of wind, the regulator is closed completely and the

pump turned off. However, if you want wind at a constant pressure you can adjust the entry diameter for different flows at different pressures. This facility can work with air or the gas that you attach to one end of the regulator, which in the case of Martian test is CO2.

The pressure inside the chamber is continuously monitored by using piezoelectric pressure sensor. This sensor was chosen due to its good working range between 3 and 12 mbars which is Mars pressure range, the pressure is shown in a digital display so we are able to have a real time pressure reading with a given error of 0.01 mbar.

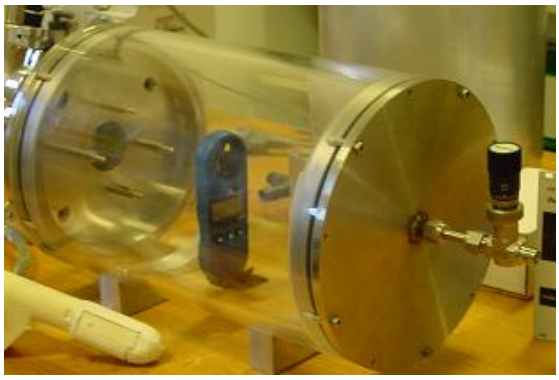

Figure 7-11 MIKRON M315X Blackbody Source General View

7.3.6 Measuring system

In order to read or measure the output voltage of the thermopiles, the resistance of the different GTS temperature sensors (Pt1000), as well as the temperature of the blackbody source throughout its Pt100, a set of pre-calibrated instruments will be used: The multimeter KEITHLEY 2700 for resistance measurements, the nanovoltmeter KEITHLEY 2182A and a commutation matrix KEITHLEY 7700. The commutation matrix allows us to connect the electrical signal to the right inputs of the multimeter and nanovoltmeter, Figure 7-12.

In order to measure the output voltage of the thermopiles a differential procedure will be used. This is achieved by using two different input channels of the commutation matrix, which are connected to the same voltage signal in direct and inverted way. Therefore constants terms are eliminated subtracting the results. This procedure allows us to minimize the errors caused by contact potentials and offset terms, which are expected to be equal or similar for both channels.

The resistance of the Pt1000s will be collected using a two wires configuration, because of the high value of the sensor resistance, while for the case of the Pt100 its resistance value will be achieved using a four wire method. Measures will be taken using integration times of 5 sec in order to increase the signal to noise ratio.

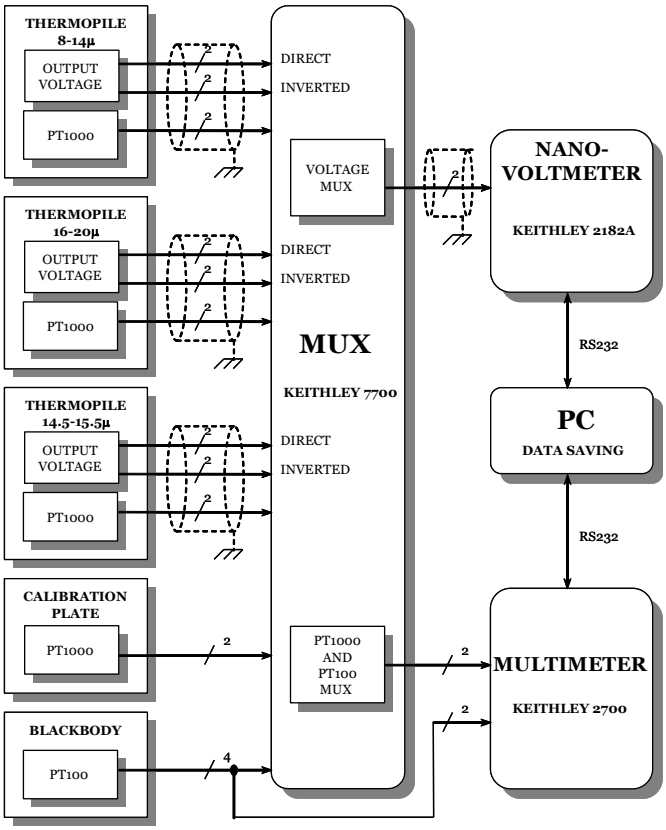

Figure 7-12 Calibration measuring system

Also, in Figure 7-13, it is shown the hardware structure of the different equipments used in some of the tests dedicated to calibrate the GTS.

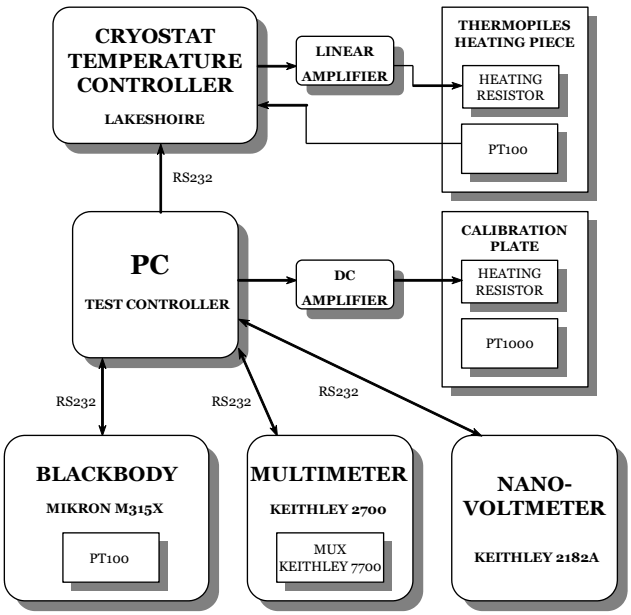

Figure 7-13 General calibration hardware configuration

7.4 TEST AND PROCEDURES

The tests will be carried out for the three thermopiles that form the GTS of the FM and QM. During the calibration process the three thermopiles will be allocated inside the metal piece designed for hosting them which is part of the boom structure, Figure 7-14.

For the identification of K_1, K_2, and K_3 the hosting piece will be place alone inside the vacuum chamber and in good thermal contact with the cold finger of the cryostat. Nevertheless, for the identification of α the calibration plate will be mounted in front of the thermopiles, generating the sandwich structure formed by the calibration plate and the piece that host the thermopiles.

Next, the whole GTS structure will be mounted on the Boom 1 structure, and it will be tested as part of the boom qualification campaign. Finally, the last two calibration tests will be run to identify the value of the GTS model parameter $K_{p\text{-}c}$ and the initial value for the parameter β, this last one is directly affected by a change in GTS thermopiles sensitivity after the qualification tests.

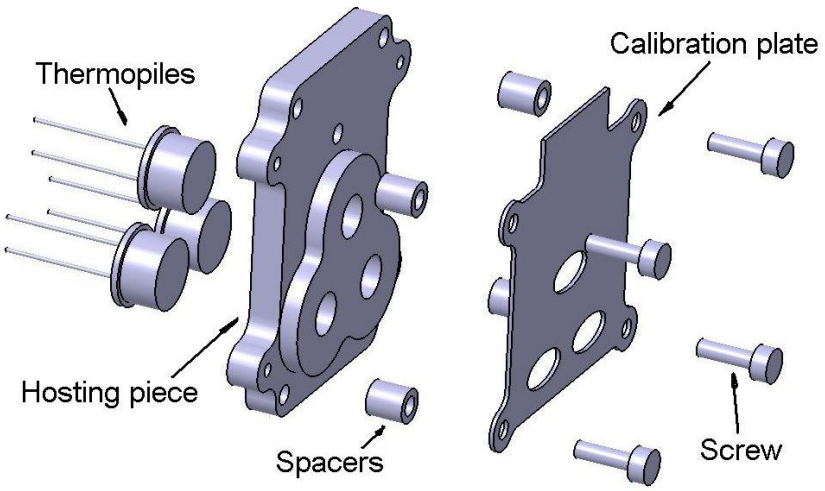

Figure 7-14 Different Parts of the GTS

The calibration tests will be carried out for the FM, but also for the spar QM. Some tests are not required to be done using the pieces or sensors of the FM or spar QM. In this tests representative elements which are similar to those used in the FM will be used. Table 7-2 provides an overview of the GTS sensor level calibration and testing requirements. Each of these tests is described in more detail in subsequent sections.

Test ID	Test name	Model	Environmental Conditions	Brief Description	Test order And Priority
GT_1	Flight calibration plate emissivity determination	Representative sample	Ambient	Obtain the emissivity curve of the flight calibration plate from 6µm to 40µm.	1.1 (HIGH)

GT_2	Thermopile-filter characterization versus temperature	Filters samples of the FM and QM batch	Nitrogen atmosphere Thermopile temperatures from 123K to 313K with intervals 10K	Characterize the filter transmittance versus wavelength and temperature.	1.2 (LOW)
GT_3	Thermopiles-RTD and calibration plate-RTD characterization versus temperature	FM QM	Thermal baths Temperatures from 200K to 333K	Obtain a representation of resistance versus temperature for each RTD, as well as a polynomial to correct the deviation from the Pt1000 norm.	1.3 (MEDIUM)
GT_4	Thermopile-sensor characterization versus temperature	FM QM	Thermal vacuum. Thermopile temperatures from 123K to 313K, with intervals 10K	Find the value of the constants of the energy balance equation that characterizes the thermopile.	2 (HIGH)
GT_5	Ground relative field of view	FM QM	Earth atmosphere Thermopile temperature of 313K	Obtain the relative part of field of view not obstructed by the flight calibration plate	3 (HIGH)
GT_6	Initial value calibration of model parameter β.	FM QM	Earth atmosphere. Thermopile temperature around 298K.	Find the initial value of β. Its value may have changed as consequence of the Boom1 environmental test campaign.	5 (HIGH)
GT_7	Identification of thermopile thermal gradient constant $K_{p\text{-}c}$	FM QM	Martian like atmosphere. Thermopile temperature around 298K.	Establish a relation between the temperature increment of the calibration plate and the thermal gradient originated between the thermopile can cap and base	4 (HIGH)

Table 7-2 GT Sensor Calibration and Testing

7.4.1 Schedule

The most important tests of the GTS test require thermal/vacuum or Martian atmosphere conditions, and will be performed in the chamber at CAB. The schedule for calibration testing for REMS GTS is given in Table 7-3.

Test name	Days	Staff and Roles	Dates (FM)	Test place and facilities

Flight calibration plate emissivity determination	1	Responsible: Eduardo Sebastián Assistant: Carlos Armiers Maite Fernández	20/10/2007	CAB Geology Laboratory
Thermopile-filter characterization versus temperature	4	Responsible: Eduardo Sebastián Assistant: Carlos Armiers Maite Fernández	21/10/2007	CAB Geology Laboratory
Thermopiles-RTD and calibration plate-RTD characterization versus temperature	15	Responsible: Eduardo Sebastián Assistant: INTA Staff	22/01/2008-20/02/2008	INTA Calibration Department
Thermopile-sensor characterization versus temperature	13	Responsible: Eduardo Sebastián Assistant: Carlos Armiers	03/03/2008-15/06/2008	CAB Robotics Laboratory
Ground relative field of view	3	Responsible: Eduardo Sebastián Assistant: Carlos Armiers	03/03/2008-15/06/2008	CAB Robotics Laboratory
Calibration of the initial value of model parameter β.	3	Responsible: Eduardo Sebastián Assistant: Carlos Armiers	20/01/2009-22/01/2009	CAB Robotics Laboratory
Identification of thermopile thermal gradient constant $K_{p\text{-}c}$	3	Responsible: Eduardo Sebastián Assistant: Carlos Armiers	20/01/2009-22/01/2009	CAB Robotics Laboratory
TOTAL	37			

Table 7-3 GTS Calibration Testing Schedule

7.4.2 Flight Calibration Plate Emissivity Determination

Purpose and description
The objective of this test is to determine the emissivity of the calibration plate versus wavelength, in order to be able to estimate its radiance based on its temperature.

The emissivity of the inward side (the side seen by the thermopiles and painted of high emissivity) of calibration plate will be determined by using the IR photo spectrometer at the Centro de Astrobiología Planetary Geology Laboratory. The calibration plate will be placed inside spectrometer to analyze the reflection properties from 6µm to 40µm. From reflection properties *r(λ)*, plate emissivity *ε(λ)* will be determined, based on the equation $\in(\lambda)=1-r(\lambda)$.

Parameter and range
Emissivity of the flight targets from 6 to 40µm

Test Accuracy
Emissivity error ±1%
Wavelength error ±20nm

Environment
Ambient (no temperature dependent variation in the emissivity is expected)

Supporting Equipment
IR photo spectrometer

Requirements
A piece of aluminum of dimensions 10mmx10mm similar to the calibration plate and painted using the same paint and procedures that the calibration plate of the FM will be used instead of the real calibration plate. This calibration sample has to be placed inside the photo spectrometer.
Since no coating degradation is expected during Martian operation, no environmental tests will be carried out over the tested sample before the test.

Calibration report data products
Digital files and plots will be produced for the emissivity versus wavelength in two different wavelengths ranges 6-25μm and 20-40μm. The second range analysis is more accurate for the data that go from 20-25μm.

7.4.3 Thermopile-Filter Characterization versus Temperature

Purpose and description
The purpose of this test is to obtain the transmittance of the thermopiles filters versus wavelength and temperature. The filters transmittance function is used to compute the energy terms that appears on the energy balance equation.

Additionally, the reflectivity of the filters in both sides at ambient temperature will be analyze and provide.

It is expected that the thermopiles filters transmission function varies with temperature, based on previous experiments and theoretical data. In fact, a drift of -0.12μm in the cut-on frequency is expected. The primary cause for this variation relies on filters characteristics and design. The analysis will be done for the 8-14μm, 14.5-15.5μm and 16-20μm filters, with temperatures that go from 123K to 313K, covering the Martian temperature working range.

The tests will be carried out using the IR photo spectrometer at the Centro de Astrobiología Geological Laboratory, but in this case placing the filter inside the spectrometer temperature control module. The module achieves thermal control using LN2 (Liquid Nitrogen) as refrigeration system and a heater for temperature stabilization. The spectrometer will work analyzing the transmittance properties of the filter from 6μm to 40μm. A nitrogen atmosphere will be used in order to avoid the formation of frost over the filter surface, and in this way the validity of the results, for low temperatures.

Parameter and range
Filter temperature from 123K to 313K with an approximate interval of 10K
Transmittance filter response from 6 to 40μm

Test Accuracy
Transmittance error <1%
Reflectivity error ±1%
Filter temperature error ±2K
Wavelength error ±20nm

Environment
Nitrogen atmosphere

Supporting Equipment
IR photo spectrometer and LN2 thermal control system

Requirements
The calibration will be done using a piece of filter of dimensions 10mmx10mm, which belongs to the same batch used for the manufacturing of the FM thermopiles.
The incident IR beam will respect the final disposition of the filter inside the thermopile, with the higher reflectivity side looking outwards.

Calibration report data products
Digital files and plots of filters transmittance function (transmittance versus wavelength) for the different temperatures of the filters in two different wavelengths ranges 6-25μm and 20-40μm. The second range analysis is more accurate for the data that go from 20-25μm.

Digital files and plots of filters reflectivity at ambient temperature in both sides in two different wavelengths ranges 6-25μm and 20-40μm. Again the second range is more accurate in the overlapping region.

7.4.4 Thermopiles-RTD and Calibration Plate-RTD Characterization versus Temperature.

Purpose and description
The purpose of the tests is to obtain a representation of temperature measured by the RTDs, according to the Pt1000 norm, versus the real temperature.

The thermopiles' RTD and the calibration plate's RTD are equal; specifically they are the Pt1000 of MINISENS P1k0.323.4Wx.010 DIN class A. The manufacture ensures the tolerances of the sensors according with the norm DIN class A, this is temperature error is equal to ±(0.15+0.002·T[ºC]).This tolerance is initially compliant with the GTS L2 requirements, but this calibration test tries to confirm and particularise sensor performance.

The tests will be carried out at INTA facilities in the Meteorological and Calibration Department, following the recommendations of EIT-90. The Pt1000 shall be calibrated in a range from 193K to 333K using for that a bath of ethanol till 295K and silicon grease from 295K to 333K. The sensor is introduced inside a tube of pyrex hermetically sealed. The tube is full of the electrical and volatile fluid FLUORINERT 84 of the company 3M.

The Martian temperature working range is not completely covered. Outside the tested range the sensor shall not be calibrated, considering the uncertainty values provided by the Pt1000 manufacturer. The reason for that is double: First, previous tests with the same sensor have shown good performance at 77K (LN2 bath), and second thermopile materials are not qualified for this temperature. Therefore, no specific calibration test is necessary to reproduce this analysis for the FM and EQM.

Parameter and range
Pt1000 temperature from 200K to 333K

Test Accuracy
Pt1000 temperature error ±0.15K

Environment
Ethanol and silicon grease baths

Supporting Equipment
Thermal bath calibrated chambers
Calibrated temperature sensor
Calibrated ohmmeter

Requirements
The test shall be directly carried out with the six thermopiles (Pt1000 inside the thermopiles) selected to be mounted on the FM and EQM models. Therefore, the calibration test will be developed before the thermopiles are allocated in its final disposition, and calibrations results for each Pt1000 sensor will be applied to the FM and EQM thermopiles.

Additionally, the test will be carried out with four Pt1000 sensors. Two of these sensors shall be mounted on the FM and the EQM GTS calibration plates. Therefore, Pt1000 calibration results shall be directly applied.

Calibration report data products
The certificate of calibration will include data with the difference or drift between the real temperature and the temperature measured by each Pt1000. Additionally, a polynomial interpolation between the real and measured temperatures will be provided for each sensor.

7.4.5 Thermopile Characterization versus Temperature

Purpose and description

This calibration test has the main objective of finding the value of the energy balance equation constants K_1, K_2 and K_3, which define the energy exchange among the different elements of the thermopile and the outside bodies (ground and calibration plate).

In order to carry out the test, the thermopiles must be glued at its final position inside the metallic piece dedicated to host them. The calibration plate is not used during this test, ensuring that the values of the energy balance equation constants, α is equal to 1.

The piece that hosts the thermopiles will be allocated inside the cryostat, and link to the cold finger, using a specifically designed sample holder and ensuring a good thermal contact. Additionally, vacuum conditions with pressures bellow 10^{-3} mbar will be achieved inside the cryostat. The thermopiles will be orientated looking at the blackbody source throughout the KRS-5 window. The total distance between thermopiles and the blackbody source must be small enough as to cover the whole field of view of the thermopiles. Anther important consideration is the necessity of remaining constant the temperature of the KRS-5 window during the whole test, in order to keep constant the KRS-5 window IR radiation. Thus, to do it a specific temperature control system shall be used with a set point of 313K. Finally, a shutter will be used to avoid the heating up of the thermopiles and window of the cryostat. A graphical description of the set up is shown in Figure 7-15.

An important consideration that we have to point out here is that the existence of Earth atmosphere between the cryostat and the blackbody source does not importantly disturb the CO_2 thermopile output. The distance between this two bodies as well as the low concentration of CO_2 in Earth atmosphere allow us to say that the optical thickness of this atmosphere column and its absorbance can be neglected.

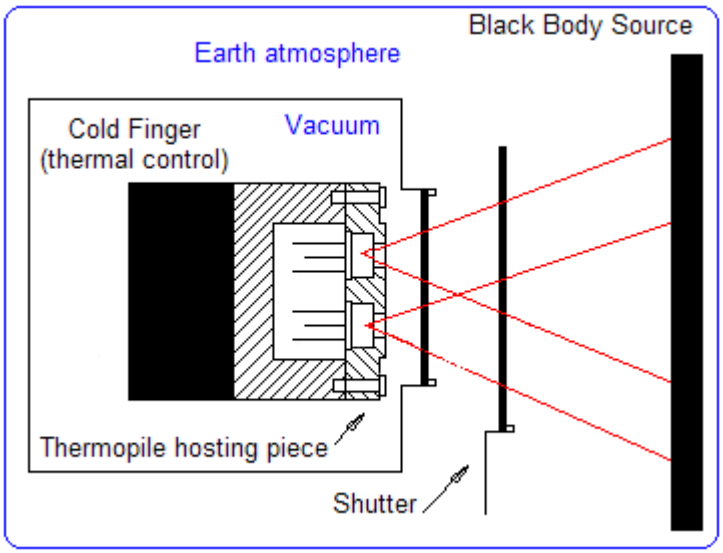

Figure 7-15 Set-up for the Thermopiles Characterization versus Temperature

In order to avoid the problems arousing from the set-up of the test, a differential analysis of the thermopiles equations is required. The test is carried out in stable temperature conditions, and therefore the temperature in the thermopile base and cap is equal, $T_{cc}=T_{cb}$. In this way the energy balance equation (9) can be rewritten, considering the particular value of α and assuming that β is equal to 1.

$$0 = K_1 \cdot \left(T_w \cdot E_g^I + E_w^I + E_{reflexions}^I - E_s^I\right) + K_1 \cdot \left(E_{cb}^O - E_s^O\right) + K_2 \cdot \left(E_{cb}^T - E_s^T\right) + K_3 \cdot \left(T_{cb} - T_s\right)$$

From this equation and for pairs of blackbody temperatures with the same or quite similar thermopile temperature, a differential analysis of the energy balance equation is achieved,

$$\begin{array}{c} 0 = K_1 \cdot \left(T_w \cdot E_{g1}^I + E_w^I + E_{reflexions}^I - E_{s1}^I\right) + K_1 \cdot \left(E_{cb1}^O - E_{s1}^O\right) + K_2 \cdot \left(E_{cb1}^T - E_{s1}^T\right) + K_3 \cdot \left(T_{cb1} - T_{s1}\right) \\ 0 = K_1 \cdot \left(T_w \cdot E_{g2}^I + E_w^I + E_{reflexions}^I - E_{s2}^I\right) + K_1 \cdot \left(E_{cb2}^O - E_{s2}^O\right) + K_2 \cdot \left(E_{cb2}^T - E_{s2}^T\right) + K_3 \cdot \left(T_{cb2} - T_{s2}\right) \\ \hline 0 = K_1 \cdot \left(T_w \cdot E_{g1}^I - T_w \cdot E_{g2}^I - E_{s1}^I + E_{s2}^I\right) + K_1 \cdot \left(E_{cb1}^O - E_{s1}^O - E_{cb2}^O + E_{s2}^O\right) + K_2 \cdot \left(E_{cb1}^T - E_{s1}^T - E_{cb2}^T + E_{s2}^T\right) + K_3 \cdot \left(T_{cb1} - T_{s1} - T_{cb2} + T_{s2}\right) \end{array} \quad (10)$$

As you can see in equation (10), the unknown energy terms E_w^I and $E_{reflexions}^I$ have disappeared, while the term that represents the KRS-5 window transmittance (T_w) continues being present. In this way the test will consist of setting temperatures for the thermopiles that go from 133K to 313K in intervals of 10K, and for each thermopile temperature select five different blackbody temperatures from 323K to 403K.

The final objective is to solve equation (9) for the values of the constants K_1, K_2 and K_3. In order to do it, it is necessary first to calculate the values of the energy terms. This is achieved integrating the Plank law inside the adequate range, just as it was shown previously in section 6.1.2.2. It must be pointed out that the transmittance variation of the thermopiles filters versus temperature will be considered, despite the small expected transmittance changes will not importantly affect or degrade the performance of the estimation.

Finally, the unknown constants K_1, K_2 and K_3 will be identified, taking the equation (10) and solving it for the set of data of thermopiles and blackbody temperatures. The calculus will be done based on a linear least squares algorithm, trying to minimize the total least-square error. As it was said in a previous section, these values could change depending on the thermopile temperature because of

different reasons. Thus, the estimation algorithm will be run independently for ranges of 20K in the temperature of the thermopiles.

Parameter and range
Thermopiles temperatures (Tcb): 133K, 143K ….. and 313K
Blackbody temperature: 323K, 343K, 363K, 383K and 403K.

Test Accuracy
Blackbody thermal source to ±0.2K
Thermopile RTD temperature ±0.15K
Thermopile output ±40nV

Environment
Thermal vacuum

Supporting Equipment
Calibrated blackbody source
Cryostat vacuum chamber and thermal control
Calibrated multimeter KEITHLEY 2700
Calibrated nanovoltmeter KEITHLEY 2182A
Commutation matrix KEITHLEY 7700

Requirements
During the tests the calibration plate is not present.
Thermopiles RTD calibration data are required.

Calibration report data products
Digital files with records of thermopiles temperatures and output voltages, as well as blackbody temperatures will be provided. Based on these data the values of the constants K_1, K_2 and K_3 can be easily obtained from (10), for each thermopile and considering different temperature ranges.

7.4.6 Ground Relative Field of View Test

Purpose and description
The purpose of this test is to obtain the value of the factor that represents the thermopile FOV not obstructed by the calibration plate, this is the value of α. The process to determine this parameter will be based again on the energy balance equation, and it will require the use of different blackbody source temperatures.

The disposition of the different elements during the test is shown in Figure 7-16. The picture illustrates the piece dedicated to host the thermopiles with the calibration plate mounted in front of it, at the same relative position that will be achieved once everything is assembled in the boom. Additionally, the distance between thermopiles and the blackbody must be the same achieved in the previous test.
The whole is heated till reach a temperature of 313K, ensuring that their temperatures are homogeneous and stable. As can be see, the thermopiles are inside the cryostat in order to maintain the geometry of the previous test and therefore obtain a more accurate value for α. The thermopiles will be looking at the center of the blackbody, and between both elements a shutter will be placed in order to avoid the warming up due to the energy radiated by the blackbody. Anther important consideration is the necessity of remaining constant the temperature of the KRS-5 window during the whole test, in order to keep constant the KRS-5 window IR radiation. Thus, to do it a specific temperature control system shall be used with a set point of 313K.

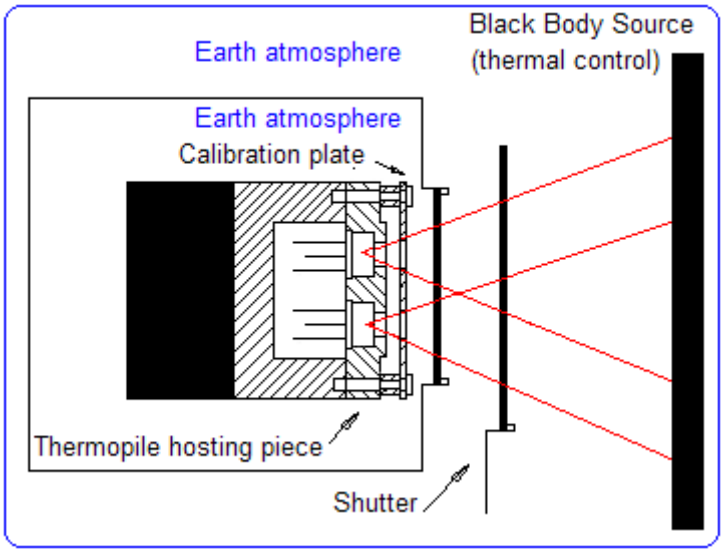

Figure 7-16 Set-up for the Ground Relative Field of View Test

Due to fact that the thermopiles and the calibration plate have the same temperature, in the energy balance equation the heat flux term derived from the calibration plate is almost null or quite minimized. The test is carried out in stable temperature conditions, and therefore the temperature in the thermopile base and cap is equal, $T_{cc}=T_{cb}$. In this way the energy balance equation (9) can be rewritten, assuming that β is equal to 1.

$$0 = K_1 \cdot \alpha \cdot \left(T_w \cdot E_g^I + E_w^I + E_{reflexions}^I - E_s^I\right) + (1-\alpha) \cdot K_1 \cdot \left(E_p^I - E_s^I\right) + K_1 \cdot \left(E_{cb}^O - E_s^O\right) + K_2 \cdot \left(E_{cb}^T - E_s^T\right) + K_3 \cdot \left(T_{cb} - T_s\right)$$

It is obvious that a differential analysis of the energy balance equation for different blackbody source temperatures is also required, in order to avoid the undesired energy terms E_w^I and $E_{reflexions}^I$. Thus,

$$0 = K_1 \cdot \alpha \cdot \left(T_w \cdot E_{g1}^I + E_w^I + E_{reflexions}^I - E_{s1}^I\right) + (1-\alpha) \cdot K_1 \cdot \left(E_p^I - E_{s1}^I\right) + K_1 \cdot \left(E_{cb}^O - E_{s1}^O\right) + K_2 \cdot \left(E_{cb}^T - E_{s1}^T\right) + K_3 \cdot \left(T_{cb} - T_{s1}\right)$$

$$0 = K_1 \cdot \alpha \cdot \left(T_w \cdot E_{g2}^I + E_w^I + E_{reflexions}^I - E_{s2}^I\right) + (1-\alpha) \cdot K_1 \cdot \left(E_p^I - E_{s2}^I\right) + K_1 \cdot \left(E_{cb}^O - E_{s2}^O\right) + K_2 \cdot \left(E_{cb}^T - E_{s2}^T\right) + K_3 \cdot \left(T_{cb} - T_{s2}\right)$$

$$0 = K_1 \cdot \alpha \cdot \left(T_w \cdot E_{g1}^I - T_w \cdot E_{g2}^I - E_{s1}^I + E_{s2}^I\right) + (1-\alpha) \cdot K_1 \cdot \left(E_{s2}^I - E_{s1}^I\right) + K_1 \cdot \left(E_{s2}^O - E_{s1}^O\right) + K_2 \cdot \left(E_{s2}^T - E_{s1}^T\right) + K_3 \cdot \left(T_{s2} - T_{s1}\right)$$

An finally, solving the differential equation for α,

$$\alpha = \frac{-K_1 \cdot \left(E_{s2}^I - E_{s1}^I\right) - K_1 \cdot \left(E_{s2}^O - E_{s1}^O\right) - K_2 \cdot \left(E_{s2}^T - E_{s1}^T\right) - K_3 \cdot \left(T_{s2} - T_{s1}\right)}{K_1 \cdot \left(T_w \cdot E_{g1}^I - T_w \cdot E_{g2}^I - E_{s1}^I + E_{s2}^I\right) - K_1 \cdot \left(E_{s2}^I - E_{s1}^I\right)} \qquad (12)$$

Equation (12) takes for granted that the temperatures of the thermopiles are exactly the same for the two sample points of the blackbody source temperature. If this simplification is not assumed and slight temperature differences are considered, the equation (12) will take the form,

$$\alpha = \frac{-K_1 \cdot \left(E_{p1}^I - E_{p2}^I + E_{s2}^I - E_{s1}^I\right) - K_1 \cdot \left(E_{cb1}^O - E_{s1}^O - E_{cb2}^O + E_{s2}^O\right) - K_2 \cdot \left(E_{cb1}^T - E_{s1}^T - E_{cb2}^T + E_{s2}^T\right) - K_3 \cdot \left(T_{cb1} - T_{s1} - T_{cb2} + T_{s2}\right)}{K_1 \cdot \left(T_w \cdot E_{g1}^I - T_w \cdot E_{g2}^I - E_{s1}^I + E_{s2}^I\right) - K_1 \cdot \left(E_{p1}^I - E_{p2}^I + E_{s2}^I - E_{s1}^I\right)}$$

The tests procedure consists of setting different blackbody temperatures from 313K to 353K. Using the test output data, equation 12 can be applied for pairs of blackbody temperatures, and the values of α for different pairs are obtained. Finally, the values of α will be averaged in order to obtain a unique and valid value for each thermopile.

Especial care must be taken with the temperatures of the thermopiles and the calibration plate. From the design of the test both must be the same, but blackbody radiation could warm up the calibration plate. In this way, data will be collected only when the difference in temperature is smaller than 1K. This requirement is necessary in order to minimize and bound the heat flux term of the calibration plate.

Parameter and range
Blackbody temperatures 313K, 333K, 353K, 373 and 393K
Thermopiles temperature (Tcb): 313K
Calibration plate temperature(Tp): 313K

Test Accuracy
Blackbody thermal source to ±0.2K
Thermopile RTD temperature ±0.2K
Calibration plate RTD temperature ±0.2K
Thermopile output ±40nV

Environment
Earth atmosphere

Supporting Equipment
Calibrated blackbody source
Calibrated multimeter KEITHLEY 2700
Calibrated nanovoltmeter KEITHLEY 2182A
Commutation matrix KEITHLEY 7700

Requirements
The thermopiles must be glued to the piece dedicated to host them, with the calibration plate mounted in front of them. The relative position between the thermopiles and the calibration plate must be exactly the same that the system will have ones is mounted on the boom.
Data will be collected only when the difference between thermopiles and calibration plate temperatures is around 1K.
The test requires the previous identification of thermopile model constants K_1, K_2 and K_3.
Filters and RTD calibration data are required.

Calibration report data products
Digital files with records of thermopiles temperatures and output voltages, blackbody temperatures, and calibration plate temperatures will be provided.
Based on these records and the value of the constants K_1, K_2 and K_3 obtained previously, the factor α for each pair of blackbody temperatures can be identified from equation (11). Finally, the average values of α and their standard deviation can be calculated for each thermopile.

7.4.7 Initial value calibration of the model parameter β

Purpose and description

As consequence of the qualification process of Boom1, the global sensitivity of the GTS (thermopiles sensitivity and/or ASIC channels gain) may have changed versus the previously

calibrated/characterized values. The purpose of this test is to calibrate the initial value of the GTS model parameter β, after the Boom 1 qualification test campaign.

This test will be part of the end-to-end test campaign, which will be also used to verify the calibration parameters. Contrary to the previous tests in which the GTS was tested alone, in this case the GTS is mounted on the boom structure with the final electrical and mechanical connections, using the ASIC as readout system, Figure 7-3. To carry out the test set-up is the described in Figure 7-12.

Therefore, from the energy balance equation (5.2), in which the value of the constants K_1, K_2, K_3 and α have been previously identified, the value of β can be obtained from a differential analysis. Since the thermopiles look directly at the blackbody no problems associated with window transmittances appear. Nevertheless, reflection from the laboratory environment must be taken into account, equation (13).

$$\begin{aligned} 0 = \beta\cdot\left[\alpha\cdot K_1\cdot\left(E_g^I + E_{reflexions}^I - E_s^I\right) + (1-\alpha)\cdot K_1\cdot\left(E_p^I - E_s^I\right) + K_1\cdot\left(E_{cb}^O - E_s^O\right) - K_1\cdot\left(E_{cb}^T - E_s^T\right)\right] \\ + (K_1 + K_2)\cdot\left(E_{cb}^T - E_s^T\right) + K_3\cdot\left(T_{cb} - T_s\right) \end{aligned} \tag{13}$$

The differential analysis is:

$$\begin{aligned} 0 = \beta\cdot\left[\alpha\cdot K_1\cdot\left(E_{g1}^I + E_{reflexions}^I - E_{s1}^I\right) + (1-\alpha)\cdot K_1\cdot\left(E_{p1}^I - E_{s1}^I\right) + K_1\cdot\left(E_{cb1}^O - E_{s1}^O\right) - K_1\cdot\left(E_{cb1}^T - E_{s1}^T\right)\right] \\ + (K_1 + K_2)\cdot\left(E_{cb1}^T - E_{s1}^T\right) + K_3\cdot\left(T_{cb1} - T_{s1}\right) \end{aligned}$$

-

$$\begin{aligned} 0 = \beta\cdot\left[\alpha\cdot K_1\cdot\left(E_{g2}^I + E_{reflexions}^I - E_{s2}^I\right) + (1-\alpha)\cdot K_1\cdot\left(E_{p2}^I - E_{s2}^I\right) + K_1\cdot\left(E_{cb2}^O - E_{s2}^O\right) - K_1\cdot\left(E_{cb2}^T - E_{s2}^T\right)\right] \\ + (K_1 + K_2)\cdot\left(E_{cb2}^T - E_{s2}^T\right) + K_3\cdot\left(T_{cb2} - T_{s2}\right) \end{aligned}$$

$$\begin{aligned} 0 = \beta\cdot\begin{bmatrix} \alpha\cdot K_1\cdot\left(E_{g1}^I - E_{s1}^I - E_{g2}^I + E_{s2}^I\right) + (1-\alpha)\cdot K_1\cdot\left(E_{p1}^I - E_{s1}^I - E_{p2}^I + E_{s2}^I\right) + \\ + K_1\cdot\left(E_{cb1}^O - E_{s1}^O - E_{cb2}^O + E_{s2}^O\right) - K_1\cdot\left(E_{cb2}^T - E_{s2}^T - E_{cb2}^T + E_{s2}^T\right) \end{bmatrix} \\ + (K_1 + K_2)\cdot\left(E_{cb1}^T - E_{s1}^T - E_{cb2}^T + E_{s2}^T\right) + K_3\cdot\left(T_{cb1} - T_{s1} - T_{cb2} + T_{s2}\right) \end{aligned}$$

$$\beta = \frac{-(K_1 + K_2)\cdot\left(E_{cb1}^T - E_{s1}^T - E_{cb2}^T + E_{s2}^T\right) - K_3\cdot\left(T_{cb1} - T_{s1} - T_{cb2} + T_{s2}\right)}{\begin{bmatrix} \alpha\cdot K_1\cdot\left(E_{g1}^I - E_{s1}^I - E_{g2}^I + E_{s2}^I\right) + (1-\alpha)\cdot K_1\cdot\left(E_{p1}^I - E_{s1}^I - E_{p2}^I + E_{s2}^I\right) + \\ + K_1\cdot\left(E_{cb1}^O - E_{s1}^O - E_{cb2}^O + E_{s2}^O\right) - K_1\cdot\left(E_{cb2}^T - E_{s2}^T - E_{cb2}^T + E_{s2}^T\right) \end{bmatrix}} \tag{14}$$

The tests procedure consists on setting different blackbody temperatures. From the test output data (temperature and voltages), equation 14 can be applied for pairs of blackbody temperatures, and the value of β for each pair is obtained. In equation 14 the value of β is completely defined and depends on some terms that can be calculated from the values of the temperatures that have been collected. Finally, the values of β will be averaged in order to obtain a unique and valid value for each thermopile.

Parameter and range
Blackbody temperature 293, 333K, 363K and 393K
Boom 1 and Thermopiles temperatures (Tcb): ~293K (Evolves freely from ambient)
Calibration plate temperature (Tp): ~296K (Evolves freely from ambient)

Test Accuracy
Blackbody thermal source to ±0.2K

Thermopile RTD: ASIC accuracy and resolution (working at 1sps and gain 512 for the three thermopiles)
Calibration plate RTD: ASIC accuracy and resolution (working at 1sps and gain 512 for the three thermopiles)
Thermopile output: ASIC accuracy and resolution (working at 1sps and gain 512 for the three thermopiles)

Environment
Earth atmosphere

Supporting Equipment
β calibration set-up
Calibrated multimeter KEITHLEY 2700
Boom ASIC and its Unit Tester

Requirements
The GTS must be located in its final position at the boom, screed to the boom and with the electrical connection done.
The boom ASIC electronic must be operative since it is the way for reading GTS electrical variable.
The test requires the previous identification of thermopile model constants K_1, K_2, K_3 and α.
IR filters and RTD calibration data are required.
ASIC channels calibration functions must be used.
Calibration plate surface emissivity is required.

Calibration report data products
Digital files with records of thermopiles and calibration plate temperatures and output voltages (all of them expressed in ASIC counts), and blackbody and laboratory ambient temperatures will be provided.
As a result of these files, the value of the factor β for each pair of blackbody temperatures will be provided.
Finally, the average and standard deviation values of β can be also obtained for each thermopile.

7.4.8 Calibration of thermopile thermal gradient $K_{p\text{-}c}$ Test

Purpose and description

This test is dedicated to establish a relation between the temperature increment of the calibration plate and the thermal gradient originated between the thermopile can cap and the base. This is to obtain the value of $K_{p\text{-}c}$. This test will be part of the end-to-end test campaign, which will be also used to verify the calibration parameters.

The thermal coupling between the calibration plate and the thermopiles hosting piece is composed by conduction, convection and radiation terms. The conduction term is dominated by the heat exchange throughout the screws that link the calibration plate and the thermopiles' hosting piece, but it is also affected by the conduction of the atmosphere. The convection term depends mainly on the atmosphere composition and pressure. And the radiation term varies depending on the absolute temperature due to the dependence of the radiation term of the factor T^4.

Therefore, atmospheric conditions play an important role in order to determine the thermal coupling between the calibration plate and the thermopiles. And the test must recreate Martian atmosphere properties (6mbar and an atmosphere mainly composed of CO_2). In this way, the test setup is completely different from the previous. The test will be carried out in Discharge Facility Chamber and at ambient temperature, since this facility can not control the atmosphere temperature. Thus, the influence of the radiation term and its variation versus temperature can not be tested in this facility but

its contribution could be consider as residual since the thermal coupling is dominated by the rest of the terms.

Contrary to the first tests, in which the GTS was tested alone, in this case the GTS is mounted on the boom structure with the final electrical and mechanical connections, using the ASIC as readout system, Figure 7-3. The reason is the influence that the boom has in the thermopiles' thermal gradients that appears because of the heating of the calibration plate. This is justified since the thermal gradient depends on the thermal coupling between the whole GTS and the piece that support it. Therefore, the thermal gradient must be tested with the final configuration of the sensor. This is with the boom and the GTS at its final position in the boom structure.

Figure 7-15 shows a mechanical description of the test setup. In this figure, it can be seen the boom allocated inside the Discharge Facility Chamber, in which the thermopiles FOV is completely covered by the walls of the chamber. The thermopiles will receive the IR coming from these walls, which is related with the chamber temperature. Additionally, the walls of the chamber reflect the IR energy coming from the boom and the calibration plate, and in order to minimize this effect the chamber will be coated with a high emmisivity paint. The electrical setup is also modified. The readings directly associated to the GTS are carried out using the ASIC inside the boom and the ICU will read these data. Finally, the ICU Unit Tester will provide the necessary means to retrieve readout data.

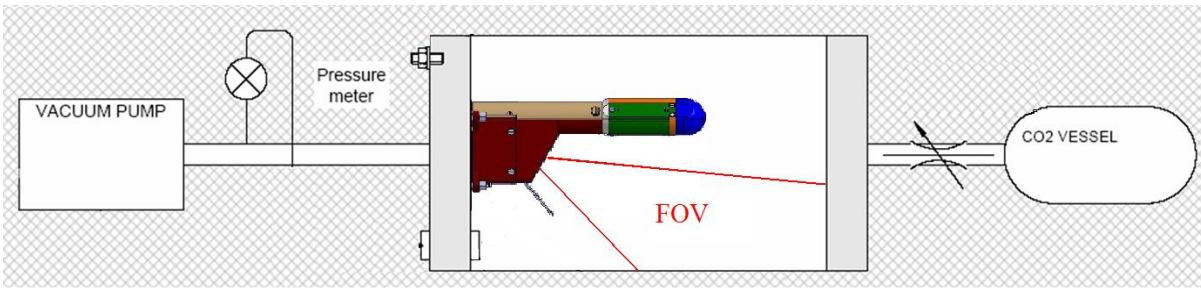

Figure 7-17 Set-up for the calibration of thermopile thermal gradient $K_{p\text{-}c}$

The test mainly consists on elevating the temperature of the calibration plate, using for that the associated heater, till stable temperature working conditions are reached. Meanwhile, the temperature of Discharge Facility chamber must remain constant, and the temperature of the thermopiles changes freely due to the heat coming from the calibration plate, in the same way that this will happen during Martian operations.

Therefore, from the energy balance equation (5.1), in which the value of the constants K_1, K_2, K_3, α and β have been previously identified, a differential analysis is applied. Since the thermopiles look directly at the chamber walls no problems associated with window transmittances appear. The equation (15) represents the result of the differential procedure for two different calibration plate temperatures. The first temperature of the calibration plate coincides with the temperature of the thermopile can base and the temperature of the ambient, so no temperature gradient appears on the thermopiles, $T_{cc1}=T_{cb1}$. Thus, the equation (15) allows us to solve for the value of T_{cc2}, by numerical methods.

$$0=\beta\cdot\alpha\cdot K_1\cdot\left(E_g^I+E_{reflexions}^I-E_{s1}^I\right)+\beta\cdot(1-\alpha)\cdot K_1\cdot\left(E_{p1}^I-E_{s1}^I\right)+\beta\cdot K_1\cdot\left(E_{cc1}^O-E_{s1}^O\right)$$
$$+(1-\beta)\cdot K_1\cdot\left(E_{cc1}^T-E_{s1}^T\right)+K_2\cdot\left(E_{cc1}^T-E_{s1}^T\right)+K_3\cdot\left(T_{cb1}-T_{s1}\right)$$

-

$$0=\beta\cdot\alpha\cdot K_1\cdot\left(E_g^I+E_{reflexions}^I-E_{s2}^I\right)+\beta\cdot(1-\alpha)\cdot K_1\cdot\left(E_{p2}^I-E_{s2}^I\right)+\beta\cdot K_1\cdot\left(E_{cc2}^O-E_{s2}^O\right)$$
$$+(1-\beta)\cdot K_1\cdot\left(E_{cc2}^T-E_{s2}^T\right)+K_2\cdot\left(E_{cc2}^T-E_{s2}^T\right)+K_3\cdot\left(T_{cb2}-T_{s2}\right)$$

$$0 = \beta\cdot\alpha\cdot K_1\cdot\left(E_{s2}^{I} - E_{s1}^{I}\right) + \beta\cdot(1-\alpha)\cdot K_1\cdot\left(E_{p1}^{I} - E_{s1}^{I} - E_{p2}^{I} + E_{s2}^{I}\right) + \beta\cdot K_1\cdot\left(E_{cc1}^{O} - E_{s1}^{O} - E_{cc2}^{O} + E_{s2}^{O}\right)$$
$$+ (1-\beta)\cdot K_1\cdot\left(E_{cc1}^{T} - E_{s1}^{T} - E_{cc2}^{T} + E_{s2}^{T}\right) + K_2\cdot\left(E_{cc1}^{T} - E_{s1}^{T} - E_{cc2}^{T} + E_{s2}^{T}\right) + K_3\cdot\left(T_{cb1} - T_{s1} - T_{cb2} + T_{s2}\right) \quad (15)$$

In this way the values of T_{cc2} and T_{cb2}, and the temperature gradient of the calibration plate $\Delta T_p = T_{p1} - T_{p2}$, originated because of the heating, the lineal approximation of (8) can be establish and from that the value of $K_{p\text{-}c}$ determined. Since several data can be taken for the first and second point of the differential procedure, different particular values of $K_{p\text{-}c}$ are obtained. These values will be averaged in order to obtain a unique and valid value for each thermopile.

Parameter and range
Discharge facility temperatures (Tg): 296K (Ambient temperature)
Thermopiles temperatures (Tcb): ~296K (Evolves freely from ambient)
Approximate calibration plate temperature: Tcb, Tcb+15K.

Test Accuracy
Discharge facility to ±0.2K
Thermopile RTD: ASIC accuracy and resolution (working at 1sps and gain 512 for the three thermopiles)
Calibration plate RTD: ASIC accuracy and resolution (working at 1sps and gain 512 for the three thermopiles)
Thermopile output: ASIC accuracy and resolution (working at 1sps and gain 512 for the three thermopiles)

Environment
Martian like atmosphere

Supporting Equipment
Discharge Facility Chamber
Calibrated multimeter KEITHLEY 2700
Boom ASIC and its Unit Tester

Requirements
The GTS must be located in its final position at the boom, screed to the boom and with the electrical connection done.
The boom ASIC electronic must be operative since it is the way for reading GTS electrical variable.
The room temperature in which the test will be carried out must remain stable.
The Discharge facility chamber temperature must remain stable.
The test requires the previous identification of thermopile model constants K_1, K_2, K_3, α and β.
ASIC channels calibration functions must be used.
IR Filters and RTD calibration data are required.
Calibration plate surface emissivity is required.

Calibration report data products

Digital files with records of thermopiles and calibration plate temperatures and output voltages (all of them expressed in ASIC counts), and discharge facility and laboratory ambient temperatures will be provided.
As a result of these files, the value of the factor $K_{p\text{-}c}$ for each pair of calibration plate temperatures will be provided.
Finally, the average and standard deviation values of $K_{p\text{-}c}$ can be also obtained for each thermopile.

7.5 ADDITIONAL TESTS

End-to-end tests will be performed to verify the calibration parameters, those functional tests will be done with the blackbody used during the calibration process.

Beside the calibration tests defined above a number of tests will be done in order to optimize as much as possible the sensor model. The tests foreseen are the following one:

1. Tests dedicated validate the results of the calibration tests, and confirm the validity of the data, using the calibration set-up.
2. In-flight calibration algorithm data with dust deposition over the GTS.
3. Colour pyrometry techniques with different emissivity bodies and calibrated radiances.
4. Atmosphere influence, analyzing CO_2 absorbance.
5. Response time.
6. Characterization of Martian surface emissivity considering the composition and textures of the ground (igneous rocks, basaltic sediments and regolithic dust)

8 UV SENSOR CALIBRATION

The UVS FM will be calibrated following the process described in this section. Since the FM cannot be used to determine the correction due to dust deposition during the mission, another model will be used. To perform this correction, several tests will have to be developed and they are also described in this section.
The UVS calibration tests will provide the data needed to evaluate the actual accuracy of the instrument. Requirement 017 (PLD 16) is about the resolution, accuracy and bands of the channels, which is also affected by the electronics, as explained in 8.1.1.1. The L2 requirement 018 (PLD16) about the dust accumulation will be explained in section 8.5 and Requirement 020 (PLD 17) about the field of view will be explained in section 8.1.1.4.

8.1 TEST CONDITIONS AND OVERVIEW

8.1.1 UVS Position and Description

The main goal of the UVS is to characterise the UV environment at the surface of Mars. The sensor has six silicon carbide photodiodes. Each photodiode has a filter in one of the ranges defined in Table 8-1.The photodiodes are surrounded by magnets as shown in Figure 8-1 to mitigate dust deposition. This is explained later in section 8.5. The six photodiodes with their corresponding filters and magnets are inserted in an aluminum AL-6082-T6 box.

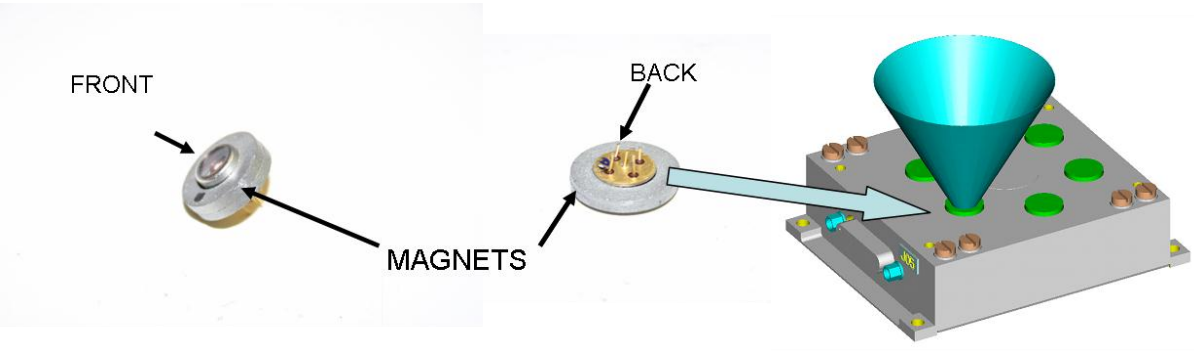

Figure 8-1 Left, photodiodes with magnets, Right, UV Sensor Housing and Field of View

This sensor will be accommodated on the rover deck near the base of the MSL remote sensing mast, as shown in Figure 8-2. This location is in pyroshock zone 3, and is visible from the NavCam, located on the top of the mast.

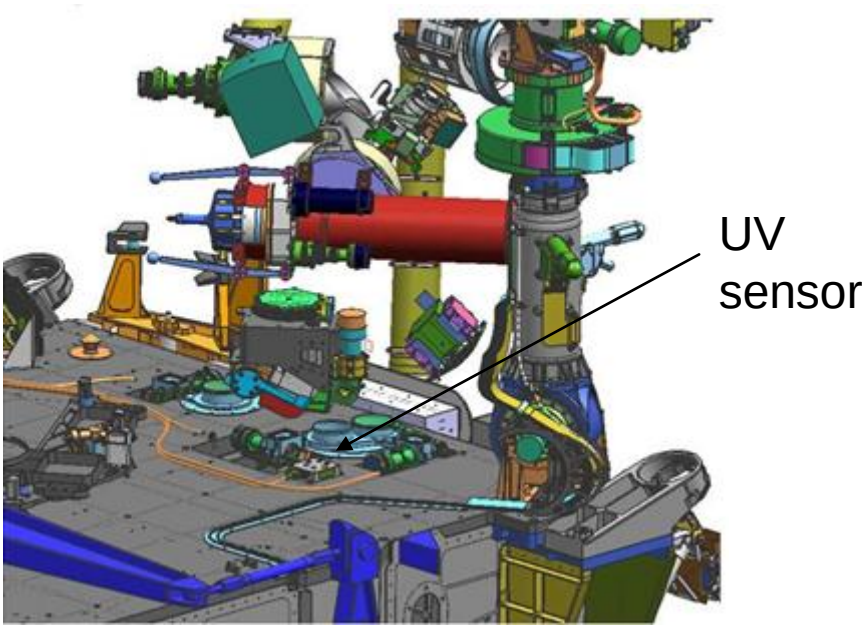

Figure 8-2 UVS Location

The sensor is essentially a set of UV photodiodes on a specific mounting as shown in Figure 4-2. The acquisition electronics are connected to the ICU via a cable away from the photodiodes in the ICU: some is internal harness, and the rest is external harness, a portion of which is on the chassis side and the rest is over the top deck as shown in Figure 8-3.

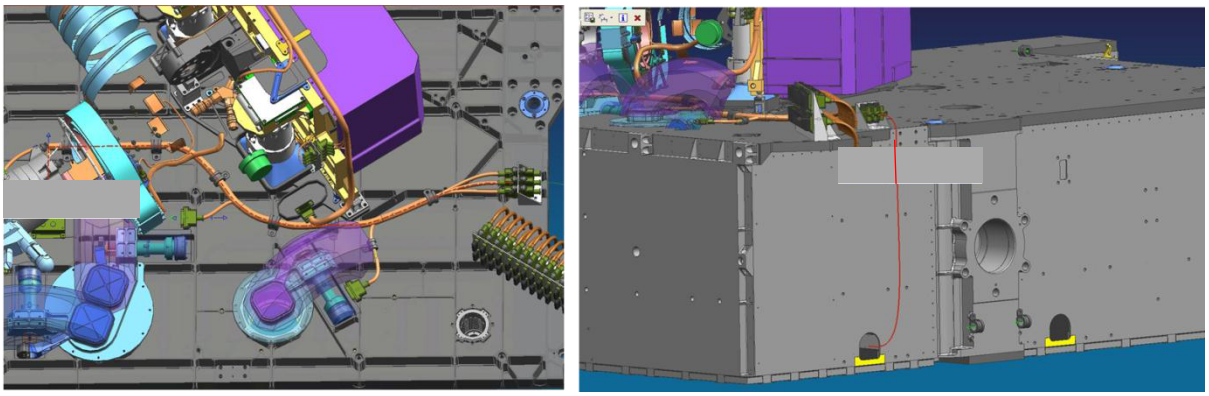

Figure 8-3 On the left, external harness over the rover deck and on the right, external harness on the rover chassis side.

8.1.1.1 Photodiodes

Each Photodiode core is a dice of 1 mm2, which transforms radiation into a current. That current is conditioned and measured by the ICU. The radiation which arrives to the dice is selected by a filter. Filter performances are defined by their spectral range, temperature dependence and light incident angle. Two other parameters influence the readings: linearity of the dice response and the field-of-view due to its construction geometry.

All the photodiodes are inserted into a type TO-39 can. Figure 8-4 shows the JEC-1 photodiodes that have been used for pre-evaluation activities.

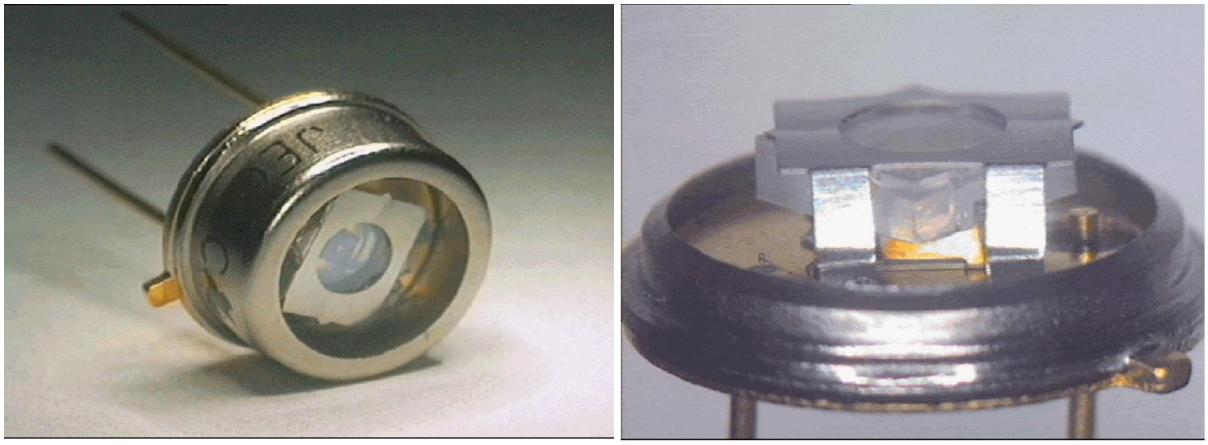

Figure 8-4 Photodiodes Housing, left, top view, right, one side view (pre-evaluation samples).

Table 3-1 shows the six different UV channels:

The REMS shall be able to measure UV radiation in the following 6 bands (with the maximum measurable irradiances in W/m2): Total dose: 210-360 nm (44.7 W/m2); UVC: 215-277 nm (1.57 W/m2); UVB: 270-320 nm (6.4 W/m2); UVA: 315-370 nm (25 W/m2); UVD 230-298 nm (5 W/m2); UVE 311-343 nm (7.65 W/m2); with a resolution better than 0.5 % of the band maximum measurable irradiance and an accuracy better than 5% of the band maximum measurable irradiance.

Those numbers are assuming dust free atmosphere.

Type	**Spectral range (nm)**	**Typical active area (mm^2)**	**Maximum measurable irradiances (W/m^2)**	**Full scale current (nA)**	**Sensor resolution (nA)**
A	315-370	1	25	685.8	$685.8/2^{16}$
B	270-320	1	6.4	905.8	$905.8/2^{16}$
C	215-277	1	1.57	172.51	$172.51/2^{16}$
ABC	210-360	1	44.7	2590.6	$2590.6/2^{16}$
D	230-298	1	5	216.12	$216.12/2^{16}$
E	311-343	1	7.65	840.34	$840.34/2^{16}$

Table 8-1 UV Channels and CBE Expected maximum solar flux

Data for Table 8-1 are extracted from the data sheet of the photodiodes flight model lot and of RD17.

Figure 8-5 shows the CBE spectral responsivity of the photodiodes. The CBE spectral responsivity of photodiodes D and E are obtained from the designed requirements of the filters, convoluted with the bare die response function.

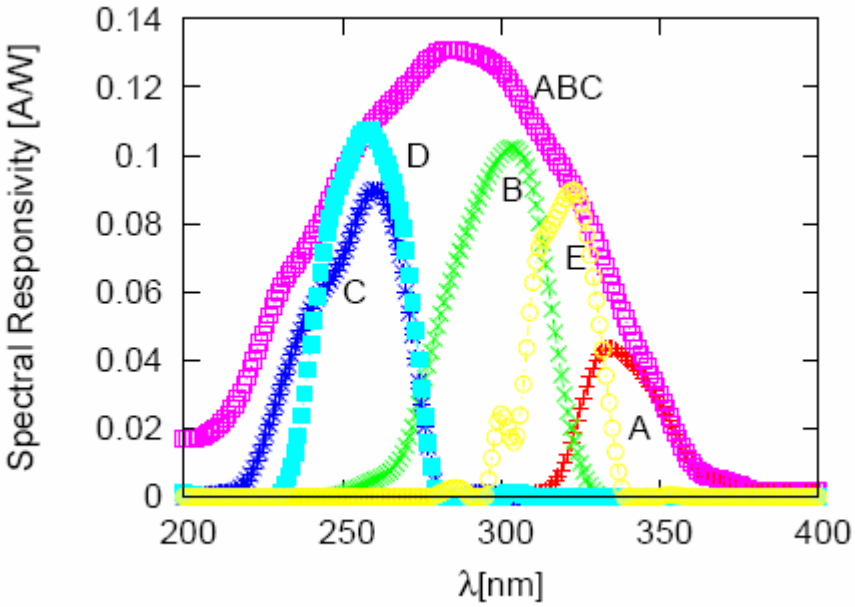

Figure 8-5 CBE spectral Responsivity of the photodiodes

8.1.1.2 Linearity

The photodiodes are expected to be linear within the measurement range. However, a linearity test is going to be performed (see sections 8.4.3 and 8.4.4).

8.1.1.3 Temperature Dependence

REMS will have to operate in Mars environmental conditions. The UVS has an operational Temperature range from -135°C to 100°C. 100° C is the maximum Temperature supported by the UV box. Some temperature dependence shift is expected from the filter response and therefore calibrated.

8.1.1.4 Real Field of View

The photodiode FOV is physically limited by the cage. The nominal value is 60° (full angle), but because of internal reflections the real response is angular dependent. The real FOV has been measured geometrically, and found to vary between 52° and 68° (See squared shape in Figure 8-6). Nevertheless it will be verified by experimental procedures, as it is reported in RD4.

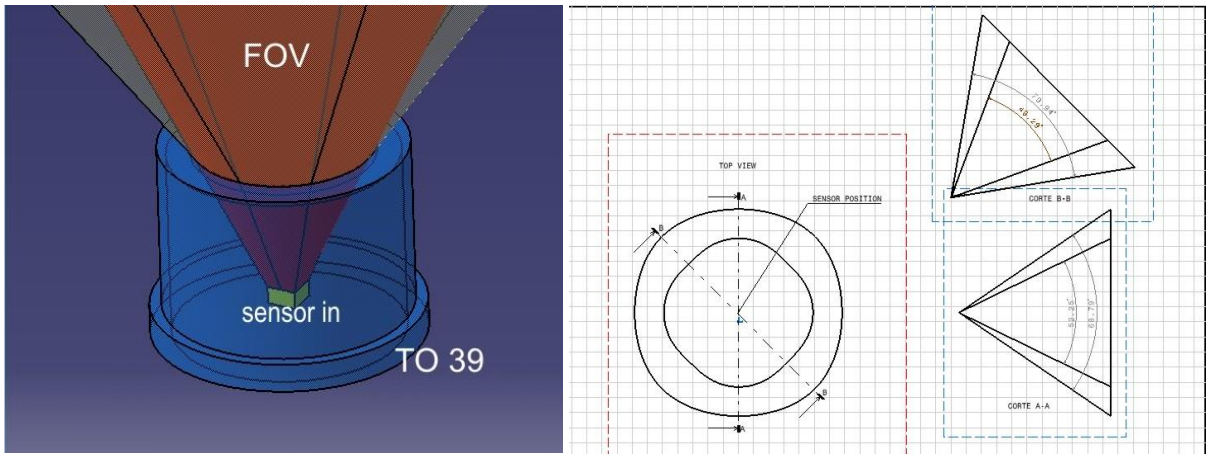

Figure 8-6 Geometrical estimation of REMS UV sensor FOV.

For more considerations about FOV science implications see RD15.

8.1.1.5 Spectral Transmission Variation with Incident Angle

According with manufacturer data (Laser-Co photodiodes), the spectral transmission of the filter A and ABC is not expected to change with incident angle, but B, C, D and E could change up to a maximum of 3,5%. It will be verified by specific tests described in section 8.3.1.

8.2 MAIN TEST CALIBRATION FACILITIES

8.2.1 Equipment Requirements

The instrumentation used for characterization purposes shall meet the following requirements:

1. The UV source shall provide UV radiation continuum down to 190nm
2. The bench shall be capable of performing a spectral scanning with 5nm of resolution.
3. The total output flux must be higher than 60W/m^2, 60 W/m^2 is a rough estimate of the upper bound of UV global radiation (clear sky, summer, midday).See RD10, and section 8.1.1.2 .
4. Maximum flux levels in each band pass range must be as indicated in Table 8-1.
5. The flux levels shall be known with a better accuracy than the expected UV sensor resolution. See Table 8-1.
6. The reference detector shall be calibrated. See section 8.3.1.
7. The atmosphere in which the calibration is developed has to be transparent to UV flux. See 8.2.2.
8. The equipment shall be capable of varying the temperature of the photodiodes in the operational range. See section 8.2.2.
9. Optical Bench shall be calibrated. See section 8.3.1

8.2.2 Environmental Chamber

The UVS will be calibrated in Martian Temperature conditions by TECNOLÓGICA. Temperature will vary from 138K to 373K. These temperature values agree with the working temperatures expected for the photodiodes, considering that they are inserted in a box that will reach those values. The cooling process of this chamber is obtained by a progressive insertion and recirculation of Nitrogen in the chamber, until the atmosphere inside it is fully nitrogen. The internal stage has a slight overpressure with respect to the outside. The cooling velocity is 30°C/min. A resistance is used to heat the chamber.

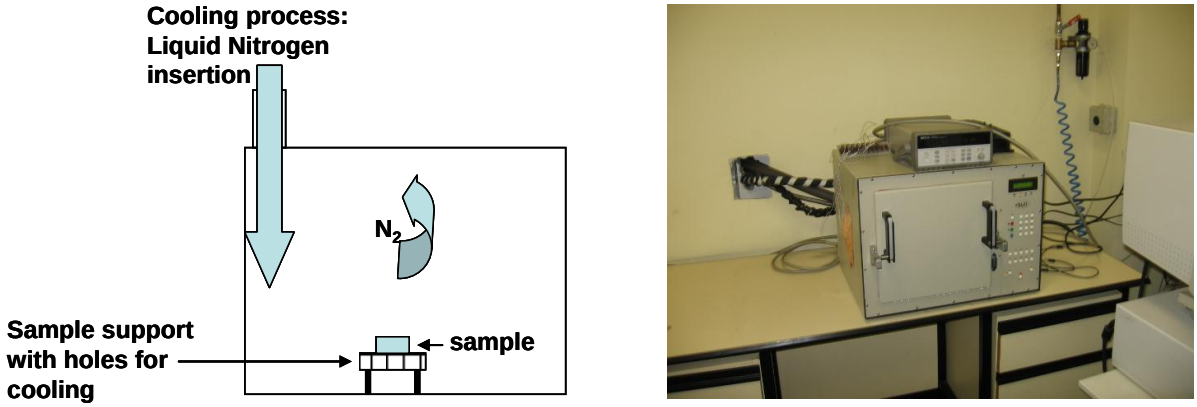

Figure 8-7 Environmental Chamber

During calibration, the photodiode is encapsulated with the fibre, so that no gas from the enivronment can enter between the beam and the photodiode window.
Nevertheless, it is important to take into account:

1. Nitrogen does not absorb in the UV region 200-400nm. The photodiodes output depends on the density of molecules within the atmospheric column between the UV lamp and the photodiodes. In case of measuring in ambient, ozone absorption can cause a decrease of the UV flux, changing the spectra, especially between 200 nm and 320 nm (peak at 254nm). This will be a problem in channels C, ABC, and D. Because of this, to avoid changes in the atmosphere density of the column, O_2 cannot be present in the chamber (O_2 is changed into O_3 by UV).
2. Nitrogen condensation is at 195.8 °C, below the UVS operational temperature.
3. Remaining water in the chamber before Nitrogen insertion can condensate. This has not been observed in previous tests.

8.2.2.1 Chamber Stabilization

The chamber is 25x25x25 mm^2 what is quite small to be enable stabilization. It is characterized with thermocouples, one of them in the sample support in the middle of the chamber (see Figure 8-7). After controlling the Temperature, it is necessary to wait for 6 minutes before considering the temperature stabilised.

8.2.3 UV Source

The UV source will be a Deuterium Lamp, spectral range 200-400nm.

8.2.4 Optical Bench

Focusing optics and monochromator will be used. The standard detector is a “multifunction optical meter”.

8.2.4.1 Beam Splitter

The beam splitter has to be calibrated (as an equipment requirement), what means that the same light has to arrive to the standard detector and to the photodiode. The calibration proceeding will be:

a. Measuring with the standard detector at a fixed UV flux
b. Switching paths of the beam splitter
c. Measuring again to calculate factor correction.

Figure 8-8 shows all the equipment, including the beam splitter.

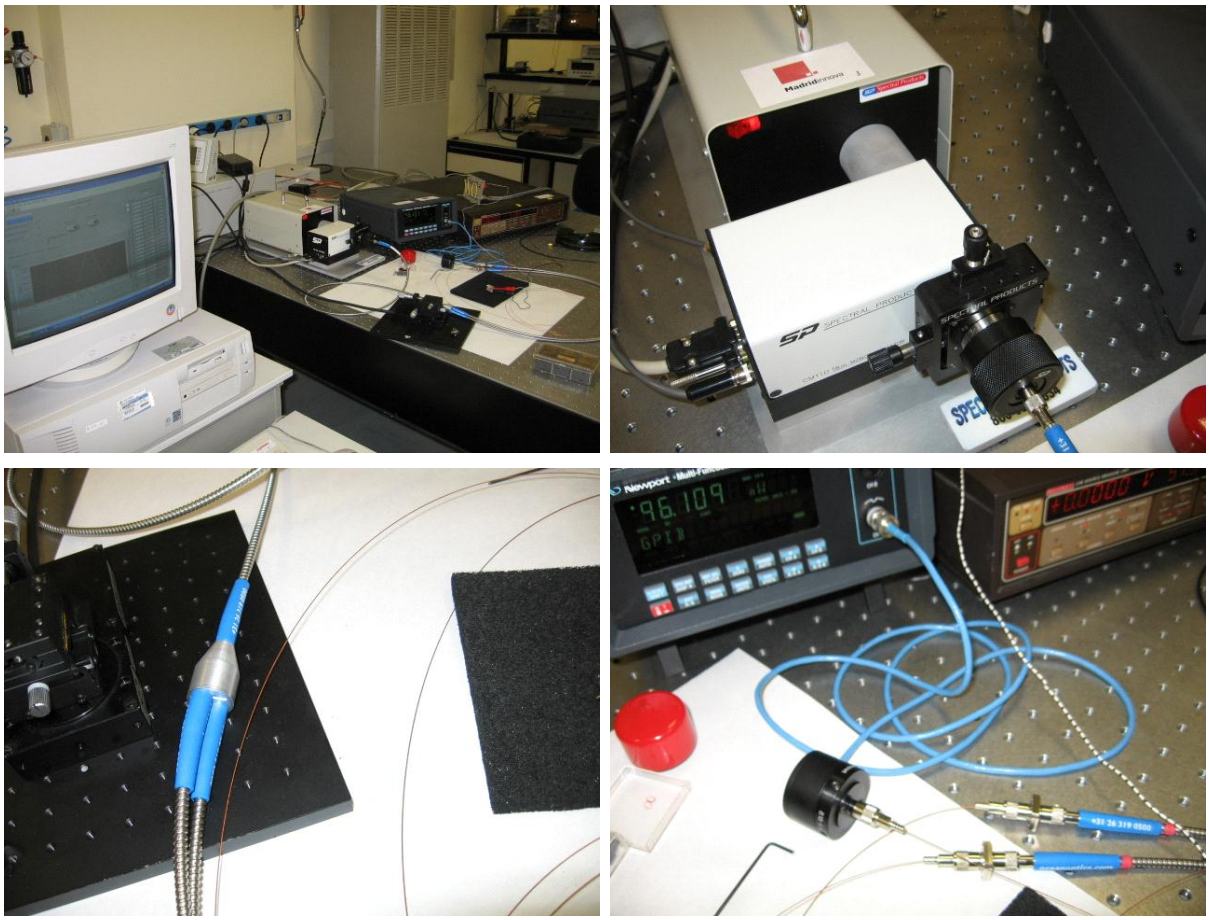

Figure 8-8 Up-left, Measuring system, up-right UV Source, monochromator, focusing optics and attenuation filters, down-left fiber optics beam splitter, down right standard detector.

8.3 PRE-CALIBRATION ACTIVITIES

Several activities are being performed to verify the calibration procedure.

8.3.1 Activities in the National Physics Laboratory (NPL)(UK)

The optical bench of TECNOLÓGICA has to be calibrated with a calibrated photodiode.
The calibration tests that are going to be developed at NPL are:

1. Spectral Scanning Calibration applied to the photodiode ABC [200-400nm]. Interval 5nm, at ambient Temperature.
2. Linearity Tabulation applied to the photodiode E, 305nm power levels to be set at 0.5, 0.38, 0.25, 0.12 watts per square m.
3. Variation of the response with incident angle applied to the photodiode B. Wavelength 305 nm and different angles, in order to identify the maximum angle, theta, from the normal for which the beam will not be significantly distorted by the curvature of the detector window, and then determine the responsivity at angles of incidence theta and theta/2.

These tests will provide a calibration factor that will be applied to all the calibration curves. Depending on the results, this correction factor will be the same for all the UV range or a different one for each wavelength.
A report with the calibration data and comments will be provided by NPL.

8.4 CALIBRATION TESTS AND PROCEDURES

The calibration of the photodiodes with the filters is going to be developed by TECNOLOGICA. Errors introduced by the electronics (ICU and cable), are determined by CRISA, and they will be applied to the calibration products after the tests.
Considering the photodiode and filter assembly, this is a brief description of the tests:

Test ID	Test	Conditions	Model	Brief description	Test order And Priority
UV_1	Internal Temperature sensor Calibration	Liquid nitrogen (138K to 173K) Alcohol (173K to 293K) Air (293 to 373)	FM batch	Obtain the response of the sensor for different Temperatures of the UV Sensor box.	1 (HIGH)
UV_2	Linearity Tabulation	Nitrogen atmosphere Ambient Temperature.	Photodiodes from the FM batch	Measurement of the responsivity of each detector with the full UV range, for different source powers.	2 (HIGH)
UV_3	Linearity variation with Temperature	Nitrogen atmosphere Temperatures 138K and 373K	Photodiodes from the FM batch	Repeat UV2 for different Temperatures	3 (HIGH)
UV_4	Spectral Scanning Absolute Calibration at different Temperatures	Nitrogen atmosphere Temperatures from 138K to 373K, ΔT=2K	FM and Spares	Characterize the Detector responsivity for each wavelength band and for each Temperature	4 (HIGH)
UV_5	Variation of Photodiode Response with Incident Angle of the direct UV beam	Nitrogen atmosphere Ambient Temperature	Photodiodes from the FM batch	Obtain the values of the photodiodes response for all the FOV solid angle.	5 (HIGH)

Table 8-2 Photodiodes Calibration Test Description

8.4.1 Schedule

Test name	Days	Staff and roles	Date	Test Place and Facilities
Internal Temperature sensor Calibration	TBD	Responsible: Eduardo Sebastián Assistant: INTA Staff	22/01/2008-20/02/2008	INTA Calibration Department
Linearity Tabulation	2.5	Responsible: Juan Barbero	11/02/2008-15/02/2008	TECNOLOGICA
Linearity variation with Temperature	2.5	Responsible: Juan Barbero	11/02/2008-15/02/2008	TECNOLOGICA

Spectral Scanning Absolute Calibration	17	Responsible: Juan Barbero	07/01/2008-29/01/2008	TECNOLOGICA
Variation of Photodiode Response with Incident Angle of the direct UV beam	5	Responsible: Juan Barbero	01/02/2008-08/02/2008	TECNOLOGICA
TOTAL	**TBD**			

Table 8-3 Schedule

8.4.2 Calibration of the Internal Sensor Temperature

Purpose and description

The purpose of this test is to obtain a representation of the temperature measured by the Temperature sensor of the UV box according to the PT1000norm, versus the real temperature.
These values will be necessary to determine the temperature of the sensors in future calibrations and for data interpretation during operation. Calibration will be performed in a different facility for different intervals of the operational temperature range.
This test will be applied to a Pt1000 of the same batch of the FM Internal UV Temperature Sensor.

Parameters and Range

Temperature from 138 to 173 K
Temperature from 173 to 293 K
Temperature from 293 to 373 K

Accuracy

Sensor Temperature error ±0.05K from 138 to 173 K
Sensor Temperature error ±0.05K from 173 to 293 K
Sensor Temperature error ±0.1K from 293 to 373 K

Environment

Liquid Nitrogen bath
Alcohol bath
Isothermal air chamber

Requirements
The sensor has to be calibrated before it is inserted in the UV box.

Supporting Equipment
Calibrated chamber of alcohol bath
Calibrated isothermal chamber
LN2 bath chamber

Calibration report data products
Data with the difference or drift between the real temperature an the temperature measured with the Pt1000. An interpolation will be necessary for intermediate values.

8.4.3 Linearity Tabulation

Purpose and description

The purpose of this test is to measure the linearity of the responsivity of each photodiode integrated with the filter.The objective is to tabulate the error of the responsivity for each range of UV intensity. The detector surface will be irradiated in the full UV range, 200-400nm at different flux levels. The different flux levels will be achieved by modifying the incident energy changing the grid of the monochromator when no wavelength is selected. Two power decades will be covered. The possible changes in the spectra due to the filter will be corrected by a calibration module in the reference detector.
This test is going to be applied to FM photodiodes.

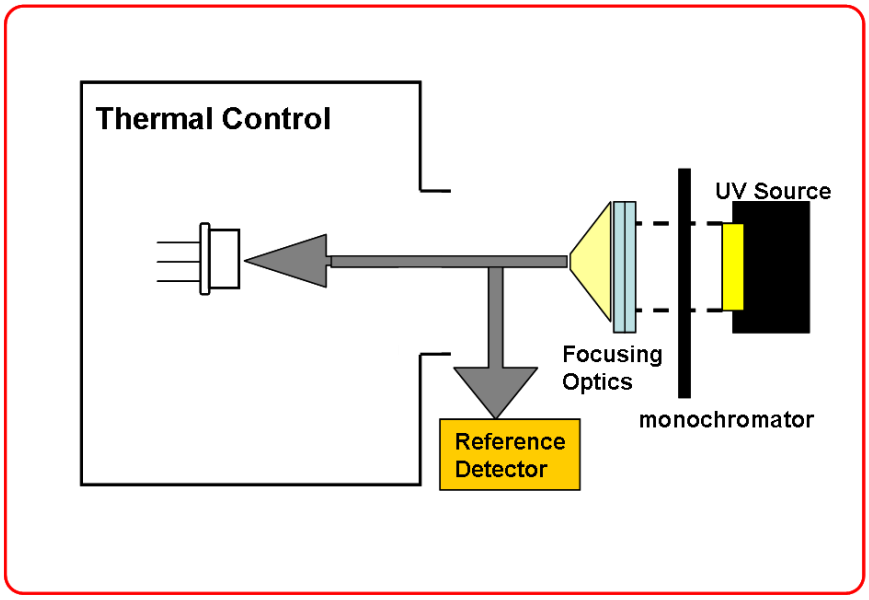

Figure 8-9 Set-up for the Photodiodes-filter Full UV range Absolute Calibration

Parameter and range
UV source range: 200-400nm
UV source at four selected powers, covering two decades.

Accuracy
Photodiodes output 1 nA
Power 1% of the full scale of each channel
Lambda accuracy 1 nm

Environment
Nitrogen atmosphere
Ambient Temperature
Ambient pressure + ΔP

Supporting Equipment
UV source 190-400nm. Hammamatsu Deuterium Lamp.
Focusing Optics
Beam splitter of fiber optics
Standard detector
Monochromator

Requirements
See 8.2.1

Calibration report data products
Sensor responsivity versus incident relative power.

8.4.4 Linearity Tabulation for maximum and minimum Temperatures

Purpose and description

Variations in the Temperature of the sensor will affect the photodiodes responsivity. The available temperature range in the facility being used for UV sensor calibration is between -135ºC and 100ºC, which is the Temperature range of the UV Box in Mars.
Linearity Calibration of test UV_2 shall be repeated at maximum and minimum Temperature levels of this range and the dependence of both photodiode and filter shall be characterised.
Using the set up of Figure 8-9, for four different flux levels and covering two decades, the UV sensors response is going to be measured at several points within the facility temperature range.
This test is going to be applied to FM photodiodes.

Parameter and range
Temperatures, 138K, and 373K.
UV source range: 200-400nm
UV source at five selected powers, covering two decades

Accuracy
Photodiodes output 1 nA
Power, 1% of the full scale for every channel
Tª 0.1K TBC

Environment
Nitrogen atmosphere
Ambient pressure + ΔP

Supporting Equipment
UV source
Focusing Optics equipment
Beam splitter
Calibrated standard detector

Requirements
See 8.2.1

Calibration report data products
Response versus Incident energy for each temperature

8.4.5 Spectral Scanning Photodiodes Response Calibration

Purpose and description

The response of the photodiodes must be fully known across the entire 200-400nm spectrum. This shall be performed using a monochromator, scanning through wavelength points 5 nm wide across the spectrum with an interval of 10nm. A collimator will be used to assure that the incident beam that arrives to the photodiodes is plain.
Sometimes the photodiodes have a response out of its band so in addition it would be necessary to check the response of each individual sensor within the entire spectral range from 200 to 400nm (not only in the particular band).
In this case the measurements will be performed at a fixed flux level.

Temperatures in the range from 138K to 373K will be covered in intervals of 20K.
The set is described in Figure 8-9 for a selected wavelength.
The procedure of this test is:

1. Sample positioning
2. Cooling of the chamber to 138K
3. Stabilization at 138K
4. Optical spectra measurement.
5. Heating to ΔT= 20K
6. Thermal stabilization
7. Optical spectra measurement
8. Repetition until 373K.
9. Cooling to ambient, 298K.

This test is going to be applied to the FM photodiodes.

Parameter and range
Temperatures 138K to 373K, ΔT=20K
Λ 200 to 400 nm, every 10nm, 5 nm band pass.

Accuracy
Photodiodes output 1 nA
Wavelength 1nm
Power 1% full scale for every channel
Temperature accuracy 0.1K

Environment
Nitrogen atmosphere
Ambient pressure + ΔP

Supporting Equipment
UV source
Focusing optics
Monochromator
Beam splitter
Standard detector
Multimeter

Requirements
See 8.2.1

Calibration report data products
Sensor responsivity versus wavelength for every Temperature point

8.4.6 Variation of Photodiode Response with Incident Angle of the direct UV beam

Purpose and description
This test will show how the filter transmittance will be affected by the incident angle. Evaluation of the importance of this calibration is developed at CAB as described in RD4.
The position of the photodiodes will be manually changed.
The measurement procedure is:

1. Situating the sample in a determined azimuth and polar angle.
2. Measurement of the optical spectrum in steps of 10 nm.
3. Changing the position of Photodiode, azimuth and polar angle and begin again.

This test is going to be applied to FM photodiodes.

Parameters and range

Azimuth angle Ψ range 0°, 40°
Azimuth angle step ΔΨ=10°
Polar angle Φ 0, 360 °
Polar angle step ΔΦ=45°
Λ 200 to 400 nm, every 5nm, 2 nm band pass.

Accuracy
Angle accuracy 0.5°
Photodiodes output 1 nA
Power accuracy 1% of the full scale for every channel

Environment
Nitrogen atmosphere
Ambient Temperature
Ambient pressure + ΔP

Requirements
See 8.2.1

Calibration Report Data Products
A curve of photodiode response versus Ψ for every Φ.

8.5 UV SENSOR DUST MAGNETIC FILTER AND DUST CORRECTION

On Mars, the UV sensor will be placed horizontally facing the sky. Both dust and frost will deposit on its surface screening the incoming radiation. The deposited dust and frost will reduce the UV transmittance to the sensor. In addition Mie scattering induced by dust particles suspended in the atmosphere will induce a dispersion of the incoming flux. Since minerals absorb in the UV, any minimal amount of dust, will reduce the UV signal in the sensor by a factor proportional to the surface covered by dust, S_d/S to first order of approximation. Paper RD10 measures the drop in transmittance as a function of deposited dust mass.
The sweep magnet experiment on the MARS Exploration Rovers Spirit and Opportunity has shown that a strong magnetic gradient can deflect the trajectories of Martian Dust, which is weakly magnetic. The magnet is a ring magnet of 12mm inner diameter and outer diameter of 16mm. It is made of Sm2Co17, material with the highest resistance to demagnetization of any known material and can achieve very strong fields (1000-1100mT). Furthermore it is very resistant to corrosion and high temperatures. The ring is embedded in an aluminium structure and the active surface of the sweep magnet is horizontal. The combination of surface magnetic field and field gradient is strong enough to deflect the paths of arriving particles so that even particles that are weakly magnetic will be attracted to the magnetic ring. To see more details about the dust magnetic filter see RD7 and RD6.
The motion of a dust grain in the Martian atmosphere in the vicinity of the magnet ring is determined by the balance between the forces of fluid drag forces gravity and magnetism (electrical effects have been neglected). As a result of the axial displacement of the particles, the photodiodes increase their effective life as a UV sensor.
As dust deposites over the photodiodes, the transmittance decreases at a determined rate. A correction procedure is being developed to estimate this rate. This process consists on detecting the fraction of the total surface that is covered by dust S_d/S, using the cameras of the rover (NavCam, MALHI and MastCam). The camera will take black and white images of a target of the same size of the photodiodes situated near them, in order to estimate the attenuation in the signal induced by the dust layer. With a robust image processing algorithm it will be possible to estimate this attenuation factor and to recover the signal during the mission. The correction method described in this plan is tested with the UV Sensor EM2.

Some activities, experimental and theoretical, were developed during the first semester of 2007 at CAB to validate the procedure. They are reported in RD8.
The L2 requirement to validate with this set of activities is 018 (PLD 16).

8.5.1 Magnets Specifications

- Type: Samarium Cobalt Sm2Co17.
- Axial magnetization
- Field Intensity: 2000 kA/m
- Maximum Work Temperature: 350°C
- Courie Temperature: 825°C
- Dimensions: Ø16 x Ø9 x 2 mm

Figure 8-10 shows how the photodiode is surrounded by the magnet, to create a magnetic field and decrease dust deposition.

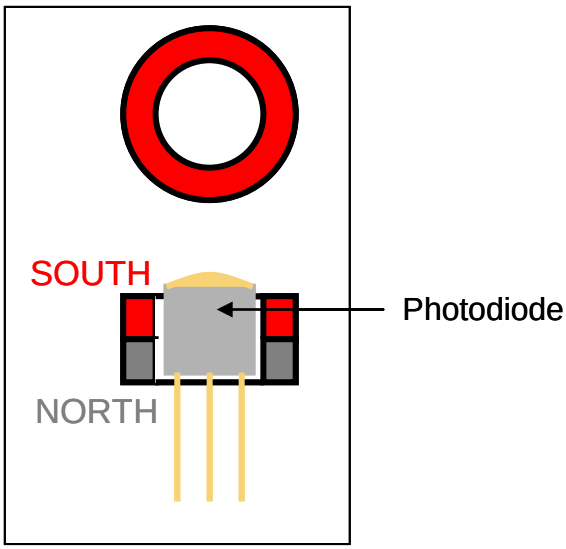

Figure 8-10 Top, top view, down, side view.

8.5.2 Mars Dust Analogue

Two types of dust are being used for the magnet tests at CAB. For testing the magnets, JSC Mars-1 was used for testing the magnets and for preliminary tests of dust correction. In later experiments, salten Skov will be used as it is considered more suitable as an analogue, but JSC Mars-1 is not neglected.

8.5.2.1 JSC MARS-1: Martian Regolith Simulant

For full information of JSC Mars-1 see RD2
JSC Mars-1 is the <1 mm size fraction of a palagonitic tephra (glassy volcanic ash altered at low temperatures). It is yellow-brown in colour. Figure 8-11 compares the VIS/NIR spectrum of the simulant to a composite martian bright region spectrum. Both spectra contain a relatively featureless ferric absorption edge through the visible, an indication of a ferric absorption band in the 800-900 region, and relatively flat absorption in the near-IR. Bands at 1400 and 1900nm in the simulation spectrum result from higher levels of H2O and OH in the stimulant than what is expected on Mars.

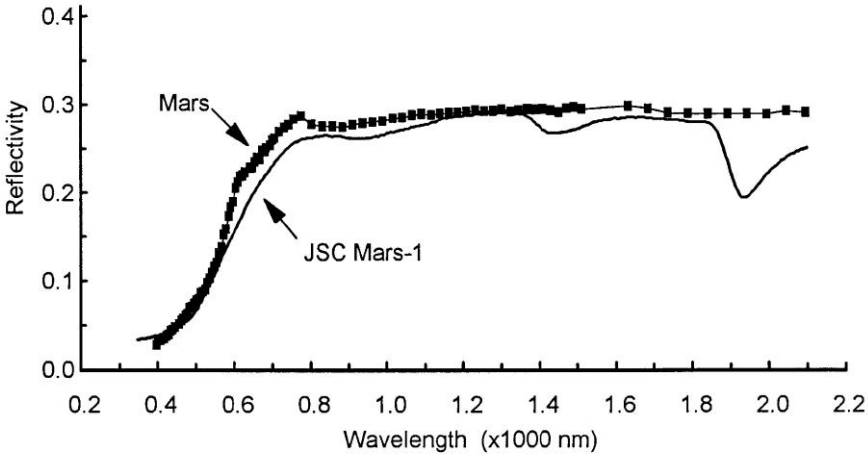

Figure 8-11 VIS/NIR reflectivity spectra of Mars Composite Bright Region and JSC Mars-1

The presence of the ferric features near 600, 750 and 860 in the Martian Spectrum implies higher levels of red (well crystalline and pigmentary) hematite on Mars than in the simulant.

There is no information about spectra in the REMS operational range 200 to 400nm. We assume a similar behaviour in the near UV region.
The chemical composition is given in Table 8-4. The second column is the measured weight by X-Ray Fluorescence and the third column is the composition of a sample measured by Viking Lander 1.

Oxide	**WT (%)**	**Wt (%) (VL-1)**
SiO_2	34,5	43,7
Al_2O_3	18,5	23,4
TiO_2	3,0	3,8
FeO	2,8	3,5
Fe_2O_3	9,3	11,8
MnO	0,2	0,3
CaO	4,9	6,2
MgO	2,7	3,4
K_2O	0,5	0,6
Na_2O	1,9	2,4
P_2O_5	0,7	0,9

Table 8-4 JSC Mars-1 Chemical Composition

Table 8-5 shows the published grain size distribution of Pu'u Nene tephra. For comparison, the blocky material which covers 78% of the area near VL-1 on Mars ranges in sizes 0,1-1500µm.

Size (µm)	**Wt (%)**
500-1000	21,4
250-500	29,5
150-250	20,8
90-150	12,9
45-90	9,2
20-45	5,4
<20	1,3

Table 8-5 JSC-1 Grain Sizes

JSC Mars-1 contains a highly magnetic component. Approximately 25 wt% of the sample can be lifted with a strong magnet. By comparison, observations of the Viking sample arm magnets indicate that the Martian soil contains between 1-7% magnetic material.

8.5.2.2 The Salten Skov Analogue Dust

This information is included in RD6.
Salten Skov Mars Analogue Dust is the < 62 µm size fraction of a chemical sediment precipitated from iron II bearing groundwater, which is found in Salten Skov, Jutland.
Every dust grain contains (roughly) the proportion of minerals: approximately 60% iron by weight with 73% of the iron atoms in goethite, 14% in hematite and 13% in maghemite. The remainder of the mass is made up of silicates and organic material.
Maghemite makes the Salten Skov quite magnetic which is the main reason for using this dust as a Mars analogue. Experimental data and fitting found that saturation magnetization was 3.6 Am^2Kg. Figure 8-12 shows how the dust will be in saturation in the magnetic field of the magnets (1000-1100 T).

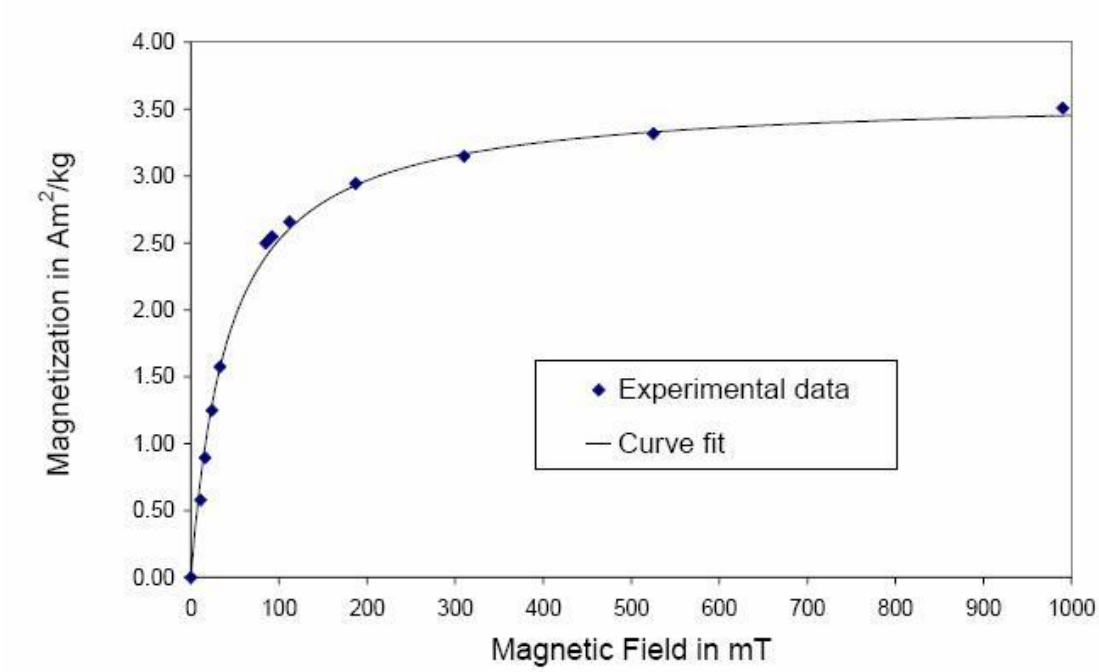

Figure 8-12 Magnetization Curve of Salten Skov analogue dust

8.5.2.3 Image Processing for Attenuation Estimation

The objective of this procedure is to estimate the attenuation brought by the dust deposition, in order to correct this effect on Earth. This estimation will be based on the processing of images showing the covered area by the dust layer over the photodiodes.
During the Martian exploitation phase of the mission, these images shall be provided by one of the cameras placed on the top of the mast of the MSL rover. During this calibration phase, these images shall be provided by a vision system that shall emulate the intrinsic and extrinsic parameters of the MSL camera.
In both cases, this processing shall be focused on the central region circumscribed by the sensors, assuming that the dust layer is homogeneous over all the UVS. This region of interest is called target. Under this target, another magnet is placed to provide the same magnetic field and conditions for each photodiode in the UVS. This set-up is shown in Figure 8-13 (left).

The algorithm for the estimation of the attenuation is based on the comparison of the images in the temporal sequence with respect to the initial and clean (without dust) image. This comparison, as mentioned, is stated in terms of histogram deviations and covered areas segmentation. The dimensionless magnitude obtained from this image processing will provide the deviation level and shall be directly related to the amount of dust over the UV sensor, and therefore, to the attenuation.

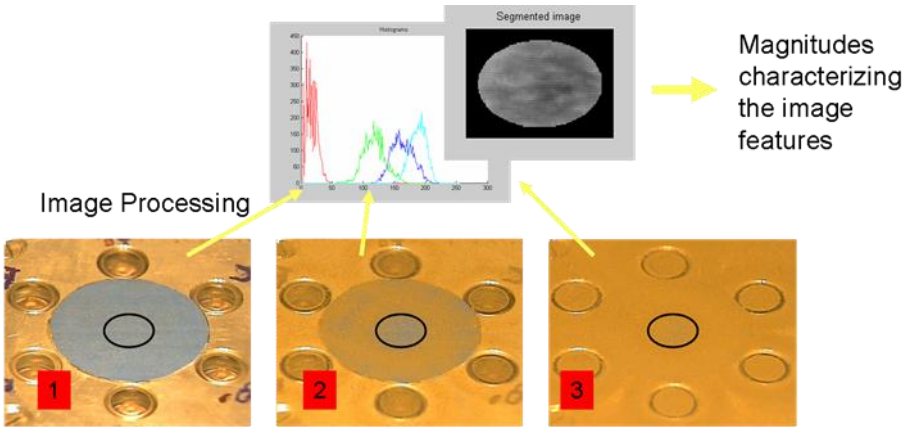

Figure 8-13 Sequence of images with increasing dust deposition

Figure 8-13 depicts some images (bottom-right) of the target surrounded by the UV photodiodes, in the course of the temporal sequence in which the dust is being deposited. This figure also shows a graph (top-right) that plots the shifts in the histograms for each picture (red plot, clean image, situation 1; green plot, dirty, situation 2;blue plot, very dirty, situation 3), as well as an example of image segmentation for a particular case. This processing shall be based on the image segmentation and histogram correlation.

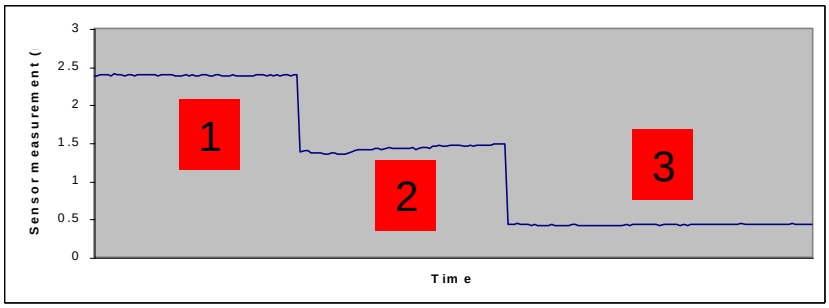

Figure 8-14 Sensor measurements from each image in the temporal sequence (clean, situation 1; dirty, situation 2; very dirty, situation 3)

Figure 8-14shows how the signal drops down as a function of dust deposition. Each signal level in the plot corresponds to each picture in the sequence shown in Figure 8-13.

This so-called non-dimensional magnitude shall be related to the attenuation in a direct and univocal way by means of the tests to be performed in Martian conditions, and by using the optical system mentioned above.

Other important aspects to consider and that will address particular tests will be the impact/effect of the sun position, solar radiation intensity and plausible errors in dust modelling. All these factors shall be modelled and stated in terms of error bar, as well as calibrated and simulated within the environmental chamber in INTA.

The estimation algorithm should be as robust as possible to be able to take up and reduce the effect of the possible variation in the environmental light intensity (caused by atmospheric effects, different sun position at the moment in which the picture is taken). These effects may cause undesired errors in the estimation chain given that these entail changes in the environmental conditions in which the pictures are taken.
Some tests shall be performed to check the level of robustness of the algorithm as well as to estimate the validity range and invariance level of the algorithm.

All these proposed tests shall be performed in the simulation chamber described in 8.5.3 with the different Martian dust analogues mentioned in 8.5.2.

8.5.3 Facilities: Environmental Chamber in CAB

Dust correction experiments are going to be performed in a new chamber that is being constructed at CAB. This chamber simulates Mars Environmental conditions (Pressure, humidity, Temperature), and dust and sun position. The chamber is prepared for different gases, but for this calibration only CO_2 will be used.

8.5.3.1 Chamber description

This chamber tries to mimic the climatologic conditions in Mars.
The chamber has three modules:

1. Bottom: The test specimen is situated over a plain and circular surface in which there are a great number of holes M4 or M5 uniformly distributed similar to those of the optical tables. This table will be on a surface which will be a nitrogen deposit. As it is a very big surface, there is cooling of the sample by thermal contact and by the atmosphere. Over this optical table all the necessary elements to simulate Mars environment (wind generators, temperature sensors…). Also there are two opposite windows to study dust in suspension.
2. Middle: In this module, several flanges will let sun light come in different incident angles simulating the Sun's positions at different moments of the day
3. Top: In this module, there is a flange for dust insertion which is described below.

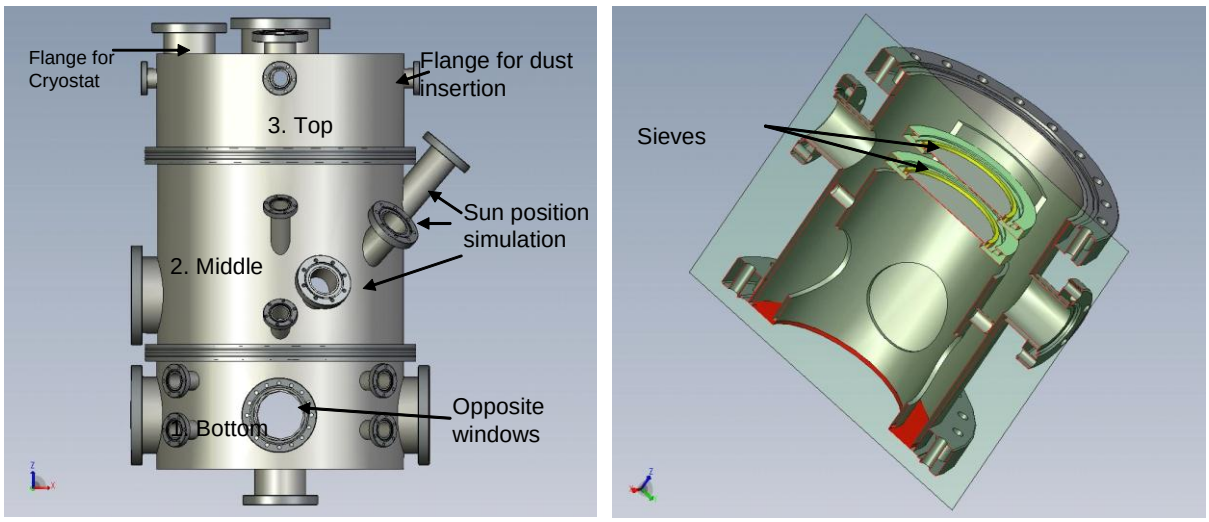

Figure 8-15 Left, Mars Environmental Chamber in INTA, right, Dust Injection System

The dust injection system is placed on the chamber in the top cover. It is mounted over a rein of 100 mm of inner diameter. The dust injection camera has a high speed window for the vibration system. It uses reins for the vacuum pump, the gas injection and the pressure sensor.

8.5.3.2 Chamber Specifications

1. Total pressure between 1 and 7 mbar.
2. Partial pressure of each gas (gas composition: CO2 (95,3%), 2,7% of Nitrogen, 1,6% of Argon, and Oxygen (0,15%), co(0,07) and water vapor(0,03). (The composition can be modified depending of the test).
3. Relative humidity level control.
4. Ambient temperature and local temperature ranges from 150°K to 280°K.
5. Martian dust mass injection.
6. UV radiation.
7. Solar Radiation (with visible range for the realization of images with different locations of the reference of solar lamp).

8.5.4 Tests and Procedures

Table 8-6 shows the different tests that will be performed to improve the estimation of the covered portion of the photodiodes area by the dust layer. From experimental results (see RD14) we know already that the attenuation by the dust is not dependent on the wavelenght of the incoming radiation (See RD10), so no experiments with monochromator will be done.

Test ID	Test name	Model	Conditions	Brief description	Test Order and Priority
UV_DC_1	Sun position and intensity.	FM equivalent model	Fixed temperature, pressure and humidity	Variation of the atmospheric radiation only during day time without sunrise and sunset.	1 (HIGH)
UV_DC_2	Temperature, Humidity and CO_2 frosting check.	FM equivalent model	Fixed Pressure	Prove the robustness of the algorithm with Temperature and Humidity.	2 (LOW)

Table 8-6 Dust Correction Tests Description

8.5.4.1 Schedule

Test name	Days	Staff and roles	date	Test Place and Facilities
Sun position and intensity	TBD	J. Martin (experimental) J. A. Rodríguez (software)	After FM delivery	Environmental Chamber in CAB
Temperature and Humidity check	TBD	J. Martin (experimental)	After FM delivery	Environmental Chamber in CAB

		J. A. Rodríguez (software)		
TOTAL	**TBD**			

Table 8-7 Dust Correction Schedule

8.5.4.2 Sun position and Intensity correction

Purpose and description
The purpose of this test is to obtain a correction of the estimate of the area covered by the dust layer for several sun positions during daytime. The sensor assembly (and the target) will be placed inside the chamber over the plain surface. Some dust will be deposited over the UV sensor housing with the dust injection system and the sensor response will be recorded for different incident angles and different intensities of a parallel ray source. The image processing procedure will be developed and the estimation of S_d/S, as explained in 8.5.2.3 will be corrected.
The two different Mars analogue Dust types will be used for these tests. See 8.5.2
This test will be applied to EQM2

Parameter and range
Solid angle α [~50º]
[50%-100%] max solar radiation

Accuracy
TBD

Environment
Fixed Temperature and humidity

Supporting Equipment
Parallel rays source
Target
Camera
Image processing tools
Salten Skov Analogue Dust or JSC Mars-1

Requirements
The light source must be stable.
Extrinsic camera parameters shall be used

Calibration report data products
Factor correction versus solid angle

8.5.4.3 Temperature, Humidity and CO_2 frosting Check

The purpose of this test is to check how the cluster formation is affected by the relative humidity of the environment and the different Temperatures. This test will be performed in the environmental chamber at CAB for different conditions of relative humidity and Temperature.
REMS may be exposed to CO2 or H2O surface frost during operation. TES surface temperature measurements for 40S-36S have shown that the ground may reach CO2 frost point temperatures (about 150 K) during winter night-time even at this mid-equatorial locations. It is argued that polefacing walls of craters should accumulate even more CO2 frost. H2O frost may also be observed

at these low temperatures. As an example according to MOC images, frost and low fogs are observed at winter time in Terby crater (as low as 24-28S), see Fig.4 in RD18.

The objective of this test is to validate the end-to-end operation of the UVS. Once such low temperatures are reached, with and without dust in the ambient, and once the frost has sublimed again. The temperature of the chamber should be lowered with a Martian representative atmosphere, with and without dust, until frost is observed. The temperature should be raised again until the frost sublimes. The measuring response of the sensor with frost should be known. The status of the sensor once the frost has sublimed (and eventually the dust remains) should be known.
This test will be applied to EQM2

Parameter and range
50%, 100% Relative Humidity TBC
Temperature from 138K to 373K, ΔT=10K

Accuracy
Temperature accuracy 0.1K TBC
Relative Humidity accuracy 1% TBC

Environment
Fixed Pressure 6mbar TBC

Supporting Equipment
Parallel rays source
Target
Camera
Image processing tools
Salten Skov Analogue Dust or JSC Mars-1

Requirements
The light source must be stable.
Extrinsic camera parameters shall be used

Calibration report data products
Factor correction versus Humidity and Temperature
Impact of CO_2 frosting in factor correction.

8.6 UV SENSOR END – TO – END SYSTEM TESTING

End-to-end functional tests will be performed once the integration with the ICU is finished.

9 WIND SENSOR CALIBRATION

The WS Flight and Qualification models (FM and QM2) will be subject to a set of tests that are described in this calibration plan.

Table 9-1 shows the science objectives for this sensor according to AD1.

	Range	Resolution	Accuracy	Sampling
Horizontal Wind Speed	0-70 m/s	0.5m/s	1m/s	1 Hz
Horizontal Wind Direction	0°-360º	30°	30°	1 Hz
Vertical Wind Speed	0-10 m/s	0.5m/s	1m/s	1 Hz

Table 9-1 Level 2 Wind Sensor Functional Requirements

The underlying philosophy of this calibration plan is that due to the similarities (materials and manufacturing processes) between EM2-3 (Calibration Models) and FMs, both models are expected to have similar performances. Based on this expectation two sets of tests will be conducted: one set on each FM (and their spares QM1-2) and the Calibration Models EM2-3 will be used to determine in detail the differences between them, and another set of tests will be done only on the EM2-3 to determine in detail the aerodynamic response of the sensor, which is expected to be similar to the response of the FM/Spares.

The first set of tests done on the EM2-3, the FMs and QMs will be used to calibrate the values of the resistors employed in each sensor, the heat losses of the dice and the temperature coefficient of the resistance of the materials of the sensors. On the other hand, the second set of tests will be mainly wind tunnel tests.

Finally, a functional test is included under the document section 9.3.4. The aim of this test is to verify the integrity of the sensor after each test or mounting procedure.

9.1 TEST CONDITIONS AND OVERVIEW

9.1.1 Wind Sensor Description

REMS has two booms located on the rover mast and placed at an angle of 120 degrees from each other in order to measure wind from all directions. Each boom has a wind sensor to measure wind speed and direction (see Figure 9-1). Each wind sensor has three wind transducers placed around the boom to measure local wind speed estimates along two perpendicular directions: transversal and longitudinal. A suitable combination of all wind transducers' output signals, using an inverse algorithm, will provide the absolute wind speed value and direction.

Wind transducers are based on hot film anemometry. A hot die is kept at a fixed temperature difference with respect to a cold or reference die, both dice are placed at a distance large enough from each other to avoid the heating of the cold die by the hot die. This temperature difference (ΔT) is controlled by a sigma-delta control loop (see Figure 9-2), which supplies power to the hot die. The circuit measures the power delivered to the hot die, and as the temperature difference is known, the thermal conductance from the hot die to the ambient CO_2 is computed. The thermal conductance is related to the wind speed.

Four hot dice assembled in a square configuration (see Figure 9-3) provide four thermal conductance values, which adequately combined, provide the thermal conductance in two perpendicular directions: longitudinal and transversal. Each die has an independent sigma-delta control loop. The wind sensor design is discussed in more detail in RD1.

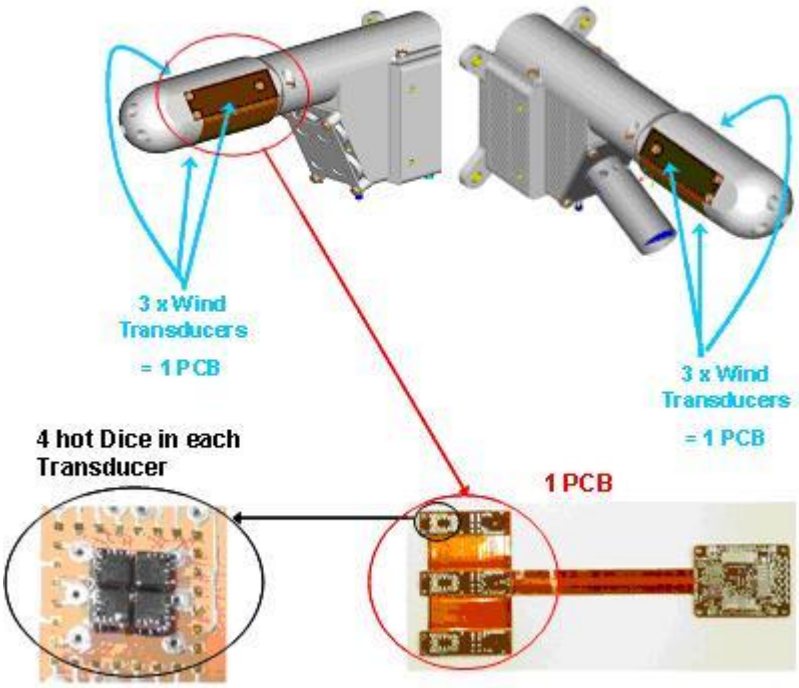

Figure 9-1 Detailed Wind Sensor

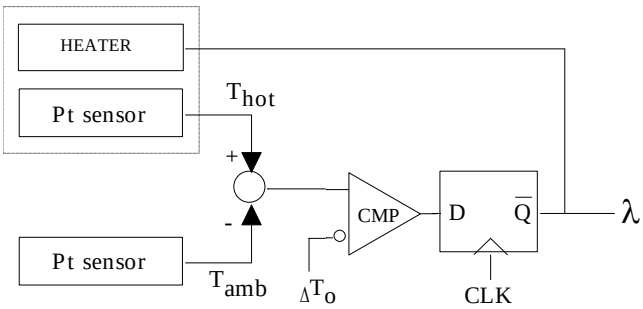

Figure 9-2 Sigma-delta control loop. Hot die temperature (T_{hot}) and cold die Temperature (T_{amb}) are compared and power is injected to the hot die (heater) to maintain a predefined temperature difference (ΔT).

Each die is isolated from the board by fiberglass supports and is wire-bonded to the board pads. Inevitably, some of the power delivered to the hot points is lost by thermal conduction through the supports and the wire-bonding itself.

The average power supplied is given by:

$$\overline{P}_{delivered} = P_{OFF} + (P_{ON} - P_{OFF})\lambda$$

Where λ is the number of clock pulses in which the heater is ON (see Figure 9-2) in a given length of time. The convective thermal conductance to the ambient is given by:

$$G = \frac{P_{convec}}{T_{Hot} - T_{Air}} = \frac{\overline{P}_{delivered} - P_{Conduction\,Loss}}{T_{Hot} - T_{Air}} = \frac{P_{OFF} + (P_{ON} - P_{OFF})\lambda - P_{Loss}}{T_{Hot} - T_{Air}} = f(V)$$

Where it can be seen that the measurement of λ, plus the estimation of power lost by conduction and radiation and the temperature of the surrounding air will give the value of the convective thermal conductance.

The actual implementation consists of four hot-point dice with a common cold-point (see Figure 9-3) called reference, separated from them. There are four sigma-delta control loops per transducer that keep the difference between hot dice and reference die constant for each wind transducer.

Sigma-delta control loops are implemented into the mixed analogue/digital ASIC integrated into each boom. The reference or cold die temperature sensors are also routed to the mixed ASIC for conditioning and digitalization. In addition, each transducer includes a PT1000 thermistor (from MiniSens) to measure the value of the PCB temperature (T_{Board}) below each transducer. They are all routed to the Mixed ASIC for conditioning and digitalization.

To calculate the thermal conductance of each die, a number of preliminary calculations have to be done:

- Each hot die has three resistors: (1) a heater resistor R_{HX}, (2) a sensing resistor Rx and (3) a third ΔR resistor used to pre-set a temperature difference, ΔT_0 between this hot point and the reference point □T_0.

- In the cold die only one of the three resistors is used, and works as the reference temperature sensor. For this purpose R_{HX} of the fifth die is renamed R_{REF}, and is used in the calculation of the thermal conductance, G.

- The value of each of the four resistors can be written explicitly in terms of the temperature

  $$R = R_0 + R_0 \cdot \alpha(T)$$

  where R is the value of one of the resistors, R_0 is the value of this same resistor extrapolated at 0ºK and α is the temperature coefficient function ($\alpha(T)$ is usually a second or third order polynomial of temperature, without the zero order coefficient: $\alpha(T) = \alpha_1 \cdot T + \alpha_2 \cdot T^2 + \alpha_3 \cdot T^3$). As the four resistors are simultaneously fabricated using the same Platinum-Titanium thin film, the temperature coefficients are the same.

- The power injected to the die is calculated: $P_{delivered} = P_{OFF} + (P_{ON} - P_{OFF})\lambda$. It varies between P_{OFF} and P_{ON} according to the previous expression. The value of the maximum and minimum power injected depends on the pre-set current values $I_{\min}$ and $I_{\max}$ that are common to all dice of the transducer board. These current values are fixed and known, and can only vary depending on the working range of the wind sensor. To calculate the values of

the power delivered to the die, given the number of activations of the heater λ (reading from a die):

$$\overline{P}_{delivered} = \overline{I^2} \cdot R_{HX} = \left\{ I_{\min}^2 + \left(I_{\max}^2 - I_{\min}^2 \right) \lambda \right\} \left(R_{HX0} + R_{HX0} \alpha \left(T_{HOT} \right) \right)$$

- The thermal conductance to the air, right of each die is

$$G = \frac{\overline{P}_{delivered} - P_{Loss}}{T_{Hot} - T_{Air}},$$

Substituting in this expression both terms:

$$G = \frac{\overline{P}}{\Delta T_0} = \frac{\left\{ I_{\min}^2 + \left(I_{\max}^2 - I_{\min}^2 \right) \lambda \right\} R_{HX0} \left(1 + \alpha \left(T_{HOT} \right) \right)}{\left(T_{HOT} - T_{Air} \right)} - \frac{P_{Loss}}{\left(T_{HOT} - T_{Air} \right)}$$

In the above equation, all parameters and variables are known except P_{Loss} and α, which will be obtained during the calibration. Each die is connected to each corresponding board by wires and carbon fiber beams. Some thermal losses throughout those links are expected and proportional to the PCB hot die Temperature differences. The objective of calibration is to measure the proportionality constant (K_{cond})

$$P_{Loss} = P_{Radiationloss} + P_{conductionloss} = K_{rad} (T_{HOT}^4 - T_{PCB}^4) + K_{cond} (T_{HOT} - T_{PCB})$$

9.1.2 Wind Transducer Model Description

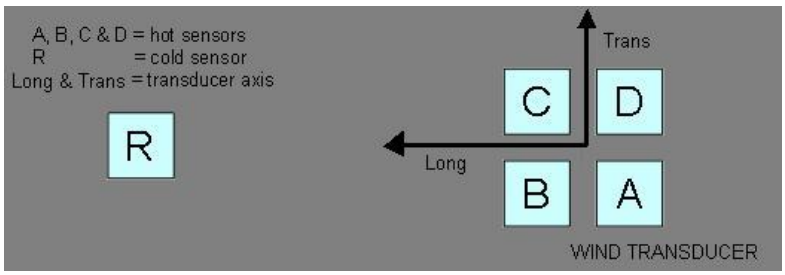

Figure 9-3 Wind Transducer Board

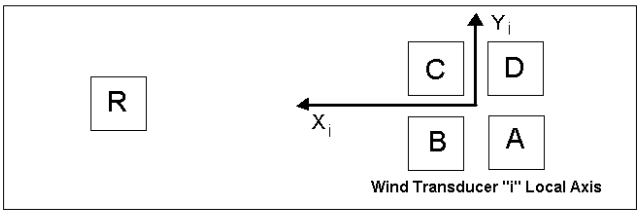

Figure 9-4 X_i and Y_i Local Axis on Wind Transducer Board i

Knowing the thermal conductance (G) of each of the four hot dice of the transducer, the 2D (2-Dimensional) Thermal Conductance at each transducer location can be obtained. The calculation process of the two Convective Thermal Conductance components on the transducer plane is as follows:

1. Calculations of the thermal conductance of each die (as described in the previous section.)

2. For each transducer, the dice are labeled: Hot Die A, Hot Die B, Hot Die C, Hot Die D and Cold Reference Die R (as shown in Figure 9-3). A first estimate of the local wind speed components is obtained from the estimators "Longitudinal Conductance" (Glong) and "Transversal Conductance" (Gtrans). These estimators are calculated as follows:

$$G_{long} = G_A + G_D - G_B - G_C$$

and

$$G_{trans} = G_A + G_B - G_C - G_D \,.$$

9.1.3 Inverse Model

The inverse model is the last step of the inference mechanism for obtaining the wind free speed and direction unperturbed by the rover.

An empirical model is built using the local planar Glong and Gtrans–wind estimators and the tested Reynolds number (as estimator of the wind speed) and incidence angles (Pitch and Yaw). The Calibration Database mesh is obtained using these data. These Database is built with data from WS_T6.

The inference engine will make use of the relative values of the components and of their signs to trim the database, in which finally a search of the most similar point of the mesh to the tested "item" will be performed.

On the other hand an additional database of EFDLab simulations is produced: Several aerodynamic simulations will be run at "average" Martian conditions: 700 Pa, 223 K, CO_2 atmosphere and two wind speed ranges (0 -20m/s and 0-70m/s) using EFDLab with a Solid Works model of the rover, CamMast, booms and wind sensors. The two wind speed ranges correspond to the wind sensor operating ranges, in the case of the simulation it implies using a finer speed mesh in the low speed than in the high speed simulations (due to a compromise between limited time and accuracy.) The local Glong and Gtrans convective estimators are obtained in the simulation for several wind flow speeds and angles, WS_S3. Using these set of simulations, the boom selection algorithm is trained, based on the relative values of the components as well as the signs, the system is capable of giving an estimation of the region of origin of the wind and of the most "sensitive" boom in that region.

The input data of the final model are the local planar components of the convective conductance on the sensors' locations. The output is the desired variables of the wind flux: Reynolds number, Yaw (Horizontal angle), Pitch (Angle of attack or vertical angle). In order to build the model, both the local sensors' speeds and the output variables are needed. The model consists of a graphical approximation of each sensor's local conductance versus Reynolds number (using wind flow speed, atmospheric composition, temperatures and pressure), yaw and pitch angle.
The training mesh will be 3-Dimensional:

$$\mathrm{Re} = 0 : \mathrm{Re\,int} : \mathrm{Re\,max}$$
$$\varphi(Yaw) = 0 : Yaw\_\mathrm{int} : 360$$
$$\theta(Pitch) = -90 : Pitch\_\mathrm{int} : +90$$

The number of points of the mesh will be

- Low Speed Range: 13x18x16
- High Speed Range: 5x18x14

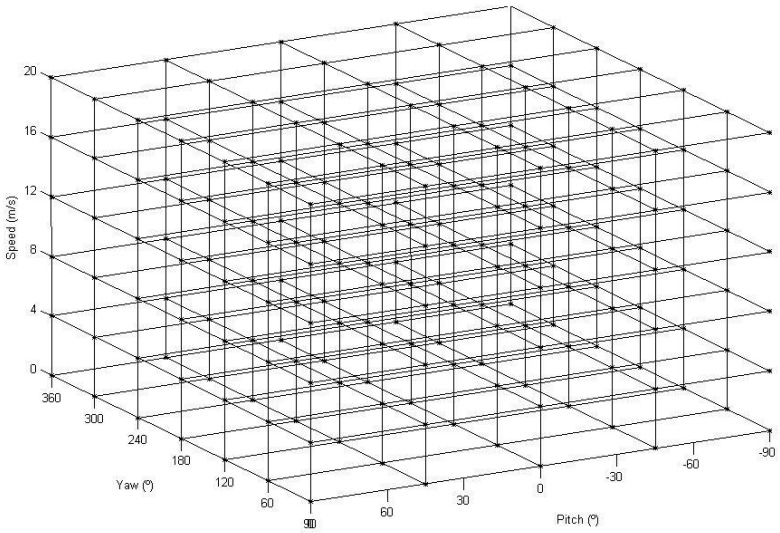

Figure 9-5 3-Dimensional Training Mesh

A possible rough training mesh is shown in Figure 9-5. Readings for the local G_{long} and G_{trans} of the sensors are recorded in all nodes of the mesh, obtaining thereby 12 sets of 4-Dimensional points, geometrically 12 hyper-surfaces:

$$(V,\varphi,\theta,G_{long1}\_b1) \qquad (V,\varphi,\theta,G_{long1}\_b2)$$
$$(V,\varphi,\theta,G_{trans1}\_b1) \qquad (V,\varphi,\theta,G_{trans1}\_b2)$$
$$(V,\varphi,\theta,G_{long2}\_b1) \qquad (V,\varphi,\theta,G_{long2}\_b2)$$
$$(V,\varphi,\theta,G_{trans2}\_b1) \qquad (V,\varphi,\theta,G_{trans2}\_b2)$$
$$(V,\varphi,\theta,G_{long3}\_b1) \qquad (V,\varphi,\theta,G_{long3}\_b2)$$
$$(V,\varphi,\theta,G_{trans3}\_b1) \qquad (V,\varphi,\theta,G_{trans3}\_b2)$$

The next step is to obtain a finer mesh for each of the 12 hyper-surfaces (G_{long1}_b1, …, G_{trans3}_b2). A finer grid of Reynolds number (Re) and angles (φ,θ) is produced and the hyper-surfaces are interpolated for those new points of the finer mesh. A tessellation-based linear interpolation is used, which is based in a Delaunay triangulation of the data, as it gives good results in comparison with other tested methods and its implementation is not complex.

The flight algorithm will be programmed in C code, after tests in Matlab.

9.1.3.1 Inference Engine

This section describes how, given the local Glong and Gtrans readings of the sensors (from the 6 local frames of reference of each transducer: $(x_i, y_i) / i \in [1,6]$), the free-flow wind speed (Reynolds) and direction will be retrieved with an error and for certain regions from the model previously created.

A description of the filters and basic algorithms used and their application in the inference mechanism can be found in document CAB_REMS_DRT_0001 titled "Simulation-based Inverse Model Development".

9.2 TEST FACILITIES

This section presents the existing Mars Wind Tunnels and other facilities that will be used to calibrate the REMS WS. The number of facilities is large in accordance with the number of required tests. There doesn't exist at the moment a facility where all tests can be carried out. Many tests will be carried out at the Mars Simulation Linear Tunnel at CAB-INTA, which by modifying speed and pressure achieves a full range of the necessary Reynolds numbers. However it is not possible to test at temperatures other than ambient, at the moment (further developments of temperature control are under study in this facility). Due to this limitation, certain tests will be carried out in other facilities (either Aarhus Marslab Wind Tunnel or Oxford University's Low Density Wind Tunnel) that do operate at Martian range temperatures. These facilities are however smaller and cannot be used as unique facility due to the WS size, particularly if full rotation is required.
The aim of using the Low Density CO_2 Discharge Facility at CRISA is to have a local testing facility to verify the equivalency between the Engineering Model and the Flight Model, without having to translate the FM elsewhere.
The rest of the facilities mentioned in this section are specific calibration facilities, necessary for some step of the calibration process of certain components.

9.2.1 Aarhus Wind Tunnel (MWT)[1]

The wind tunnel facility at Aarhus University is intended to reproduce the environmental conditions observed at the surface of Mars, specifically the atmospheric pressure and composition, the temperature, wind conditions and the transport of airborne dust. It consists of a re-circulating wind tunnel housed inside an environmental chamber. This chamber can be evacuated to around 0.01 mbar and then re-pressurized and held at Mars like pressures (typically 6-10mbar). In this wind tunnel turbulence levels are typically between 3-16% (depending on the wind speed) and wind speeds in excess of 30m/s have been achieved.

9.2.1.1 Chamber Description

The outer length of the chamber is 3m. The length of the inner tube, shown in Figure 9-6 is 1.5 m and its diameter is 40 cm. The gas enters the inner tube on the left and is drawn through the tube by the action of the fan, which is colored in red in Figure 9-6. An axially mounted electric motor driven fan draws gas down the central wind tunnel and returns it through an outer cylinder. The gas passes the fan and returns from right to left from the outside of the inner tube. There are several windows in the tank that allow visual monitoring of the experiment and the use of LDA anemometers. Liquid nitrogen can be led through a pair of cooling tubes colored in blue if low temperatures are desired.

[1] http//www.marslab.dk/WindTunnel.htm

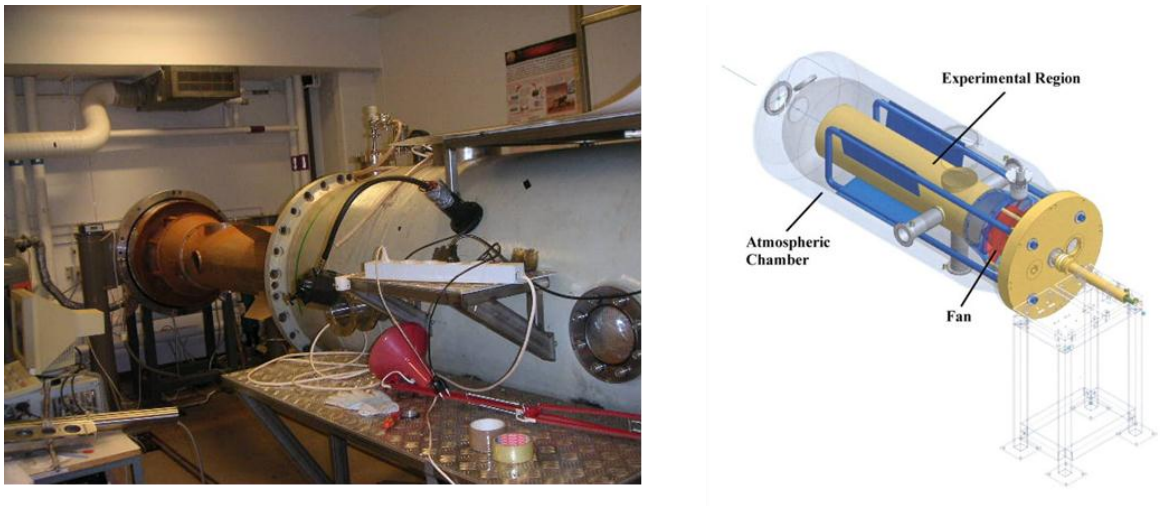

Figure 9-6 Aarhus wind tunnel

9.2.1.2 Wind Tunnel Specifications

- Pressure 600-1200Pa (6-12mbar).
- Air flow velocity achieved in excess of 30m/s.
- Turbulence levels typically between 3-16%.
- Gas used CO_2.
- Mars temperature range.

9.2.2 Isothermal Chamber in INTA

9.2.2.1 Chamber Description

INTA's Isothermal Chamber (HART 7381) (see Figure 9-7) achieves temperatures ranging from 203K to 343K. The chamber temperature is recorded with two platinum resistance thermometers following the recommendations of EIT-90. In addition a multi-meter KEITHLEY 2010 for resistance measurements and a commutation matrix KEITHLEY 7700 are available for measurements in the chamber.

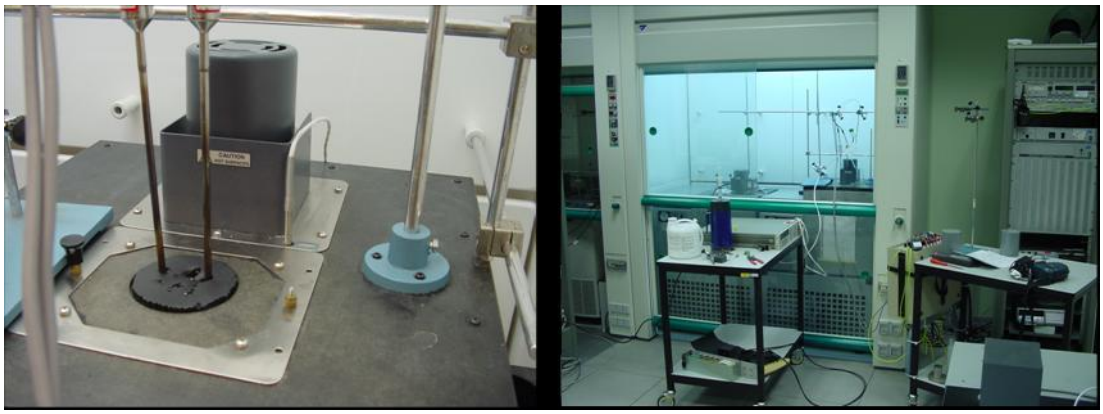

Figure 9-7 Isothermal Chamber in INTA

9.2.2.2 Chamber specifications

- Ambient Pressure
- Temperature from 203K to 343K

- Liquid used: Alcohol and Silicone grease.

9.2.3 CRISA's Vacuum Chamber

The chamber to be used for the Thermal Vacuum tests is a SERAE TVC-1.

9.2.3.1 Chamber Description

Figure 9-8 Thermal Vacuum Chamber in CRISA

9.2.3.2 Chamber Specifications

- Useful capacity: Ø 1300 mm L 1500 mm.
- Temperature Range: 123K to 393K.
- Temperature Stability: between $\pm$0.5K.
- Maximum gradient: 3 to 5K/min.
- Vacuum range: Better than 1.10^{-4} Pa.
- Vacuum system: Cryogenic pump.
- Cooling: liquid/gas nitrogen type.

9.2.4 Mars Simulation Linear Tunnel

A linear motion facility will be used for certain calibration tests of the REMS wind sensor. The facility will be inserted in a long chamber to avoid undesired air gusts.

9.2.4.1 Chamber Description

Linear motion is produced by a robustly built Hepco Motion DLS5 unit placed inside a plexy-glass chamber, with interior stands to keep the motion unit/guide leveled. This system consists of a strong and compact aluminum beam fitted with a six meter long slide track. The linear motion is produced by a 50AT10 timing belt and pulley system that gives an excellent combination of strength and speed accuracy.

A key feature of the linear track is the carriage, which is made from two separate aluminum plates. The top plate can be removed by releasing a few socket head screws, allowing further machining of the mounting system to the customer's requirements. The REMS WS can easily be removed and placed in this carriage and then easily be placed again on the track.

The chamber has a main access through which the tested item is inserted and fixed to the carriage which has an intermediate Pan and Tilt unit to provide all angular configurations. The engine is placed outside the chamber to remove all possible heat sources and therefore thermal gradients inside.

The chamber has several thermistors to record the temperature of the chamber at all times in different locations. There are as well 2 pressure sensors, to confirm the value and stability of the pressure in the chamber.

An external computer acquires the signals of the environmental sensors IN the chamber (pressure and temperature), as well as running an interface program with the Linear Motion Unit. This interface program commands the Motion Unit, setting the desired speed selected by the user. This positioning system permits to action the unit with a zero backlash stablY controlled velocity in its six meter long track. On the other hand it records the instantaneous speed, acceleration and position, accompanied all by a time-stamp. The pan and tilt unit is also controlled by this computer, communicating with the unit via Hyper-terminal.

Plexy-glass is used to be able to verify the sensor integrity at all times. Another reason is that this facility will be used for the radiation tests. Although for direct radiation the radiation simulation lamps will be placed inside the chamber, for diffuse radiation the illumination system will be set up on the outside of the chamber.

9.2.4.2 Velocity Options of linear motion

The wind transducer response varies according to the thermal conductance to the ambient, which is directly related to the Nusselt number, which is used to calculate the necessary equivalent speed and pressure in tunnel test section. The unit can be programmed with various velocities in the range of interest of 0 m/s to 1 m/s (velocities that guarantee that enough measurements are made during the linear movement on the guide: a minimum of 10 measurements at stable speed are necessary). In order to avoid undesired turbulences provoked by previous motion, there will be a 1 minute time lapse between tests.

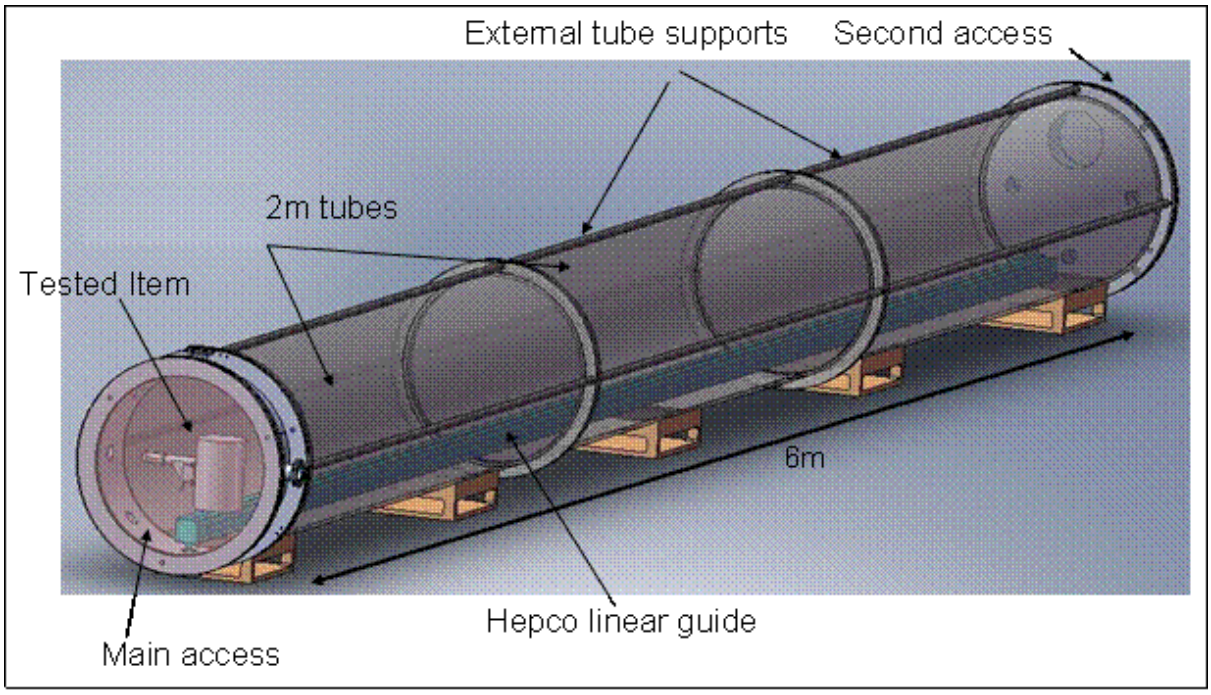

Figure 9-9 Mars Simulation Linear Tunnel

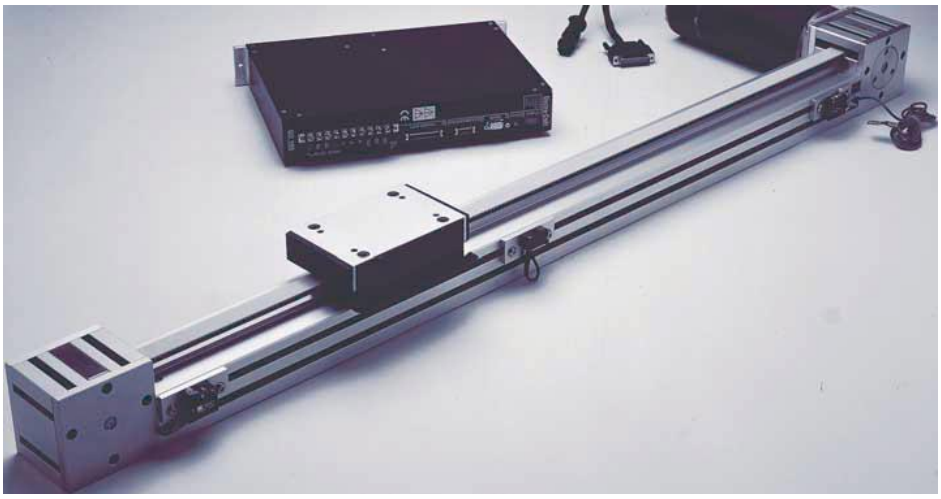

Figure 9-10 Hepco linear Motion Guide

The wind transducer response varies according to the heat transferred to the ambient atmosphere, through conduction, natural convection and forced convection. The heat transferred through convection is proportional to the Nusselt number. For natural convection, the Nusselt number depends on the Rayleigh number, the product of the Grashof and Prandtl numbers, while for forced convection the dependence is on the Reynolds and Prandtl numbers. The conditions of this test will be tuned in order that the dimensionless numbers expected in the Martian atmosphere are approximated as closely as possible considering the mechanical and thermal constraints of the apparatus.

The tests will be conducted in a variable density carbon dioxide atmosphere, at room temperature. In the case of forced convection, as the Prandtl number is approximately independent of pressure (in the

Martian pressure range) the tests have to be conducted at different Reynolds, varying either the pressure or the wind speed. To attain the upper bound for Re, the density in the chamber has to be set well above that of the Martian air, while in the case of the lower bound one must use lower traveling speed and pressures. As an example, Table 9-2 and Table 9-3, show the equivalence between Reynolds number in Mars (given a wind speed and pressure) and the same Reynolds number in the tunnel (for various combinations of wind speed and pressure in the tunnel).

Pressure Mars (mbar)	Wind Speed Mars (m/s)	Reynolds Number	Pressure Tunnel (mbar)	Wind Speed Tunnel (m/s)
7	1	25.6	140.0	0.05
7	1	25.6	70.0	0.10
7	1	25.6	46.7	0.15
7	1	25.6	35.0	0.20
7	1	25.6	28.0	0.25
7	1	25.6	23.3	0.30
7	1	25.6	20.0	0.35
7	1	25.6	17.5	0.40
7	1	25.6	15.6	0.45
7	1	25.6	14.0	0.50
7	1	25.6	12.7	0.55

Table 9-2 Possible Combinations of Testing Pressures and Speeds for the Reynolds number corresponding to Martian pressure of 7mbar and 1m/s wind speed.

Pressure Mars (mbar)	Wind Speed Mars (m/s)	Reynolds Number	Pressure Tunnel (mbar)	Wind Speed Tunnel (m/s)
7	70	1791.8	980.0	0.50
7	70	1791.8	890.9	0.55

Table 9-3 Possible Combinations of Testing Pressures and Speeds for the Reynolds number corresponding to Martian pressure of 7mbar and 70m/s wind speed.

9.2.5 Functional Test Unit

The chamber to be used for the functional tests will be a pressurized vessel, with gas inlets and outlets to produce the desired wind inside the chamber.

9.2.5.1 Chamber Description

The working principle of the chamber is the gas discharge through an inlet, whilst pumping out the gas on the opposite side of the chamber, through two outlets connected to a pump. In Figure 9-11 there is a snap-shot of the simulation of the facility design under the working conditions, so as to achieve an approximate speed of 10m/s at the sensor position. The gas is conducted through a funnel like structure at the inlet to ensure the flow at the senor position. The chamber will have temperature sensors to monitor this variable. The pressure, on the other hand will be monitored at the inlet and outlet (by the valve and pump).

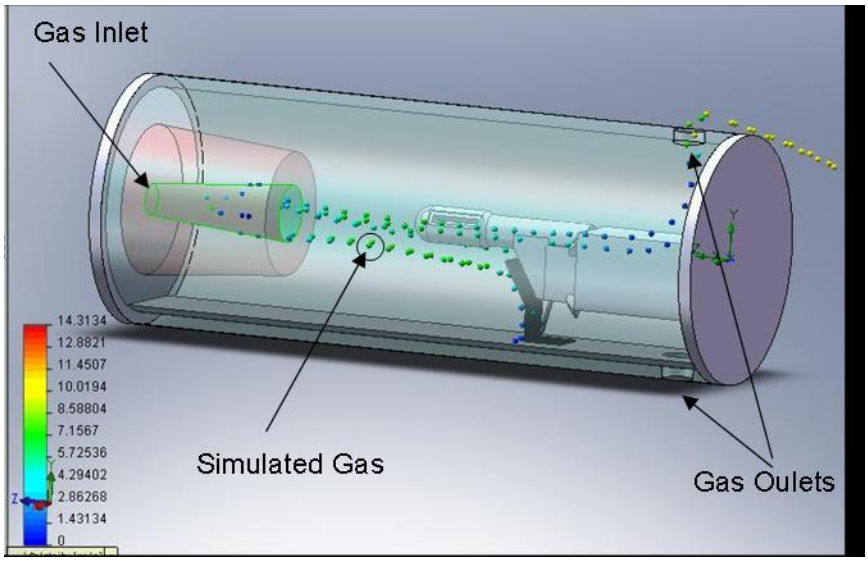

Figure 9-11 Functional Low Density CO2 Discharge Facility

9.2.5.2 Chamber Specifications

- Useful capacity: Ø 300 mm L 500 mm.
- Temperature Range: Ambient
- Pressure range: Between 3 -20 mbar.
- Vacuum system: Pump.
- Gas: Air/CO_2

9.2.6 Aerodynamic Tunnel (INTA)

The aerodynamic tunnel to be used with the scaled version of the rover and wind sensor is still to be decided, and therefore in TBD status.

9.2.7 Oxford University's Low Density Wind Tunnel (LDWT)[2]

This unique facility is owned and run by Oxford University's Department of Engineering Science. It is located in the Osney Laboratory. LDWT is a facility in which anemometers can be tested and calibrated in Martian surface conditions, namely a carbon dioxide atmosphere at pressures of 5-10mbar, temperatures of 160-300K, and flow speeds ranging from 0.5m/s to 70m/s. The primary determination of wind speed is obtained from orifice plates, which measure the flow rate into the wind tunnel. The flow field is characterized using a Pitot tube on a translation stage. The LDWT was developed to test and calibrate wind sensors for the Beagle2 mission (2003).

9.2.7.1 Chamber Description

The LDWT is an open-circuit wind tunnel, originally designed to create continuous hypersonic flow at low pressure. The LDWT test chamber is 1.5 m in diameter and ~1.5 m wide. Air (or any other desired gas) is injected from one side of the test chamber through a carefully designed nozzle. At the other

[2] http://www.atm.ox.ac.uk/user/wilson/lpwt.html

side of the test chamber lay powerful vacuum pumps. The pumping system consisting of: 1x 90kW vapor booster pump (Edwards's special model 100B4), 1x Roots-type booster pump (Edwards 1R80) and 3x Rotary Piston pumps (Edwards H1SC3000).

Figure 9-12 Oxford Wind Tunnel (left). REMS BB Boom in the Tunnel (right)

9.2.7.2 Tunnel Specifications

- Pressure range 5-10 mbar.
- Air flow temperature can be set in the range 200K -300K.
- Gas used CO_2 or dry air.
- Flow speed range from 0.5 to 70m/s.
- Absolute flow speed accuracy is 3% of flow speed at speeds > 1m/s.
- Repeatability is better than 1% of flow speed for speeds >1m/s.
- Fluctuations in flow speed are at most 0.3% of the flow speed.

9.2.8 MARSWIT, AMES Research Center

Marswit is a wind tunnel facility that belongs to the Planetary Aeolian Laboratory (PAL) at the N-242 vacuum test chamber at AMES Research Center. It is used for conducting experiments and simulations of Aeolian processes under Mars conditions. PAL is a valuable resource for testing the REMS WS because it requires a large, low pressure (5mbar) environment.

9.2.8.1 Chamber Description

The facility consists of the environmental test-chamber and a control room/office. The chamber is 30 meters high and has a total volume of 4000 cubic meters. An open circuit wind tunnel measuring 1.3 by 1.3 by 13 m is located inside this large chamber.

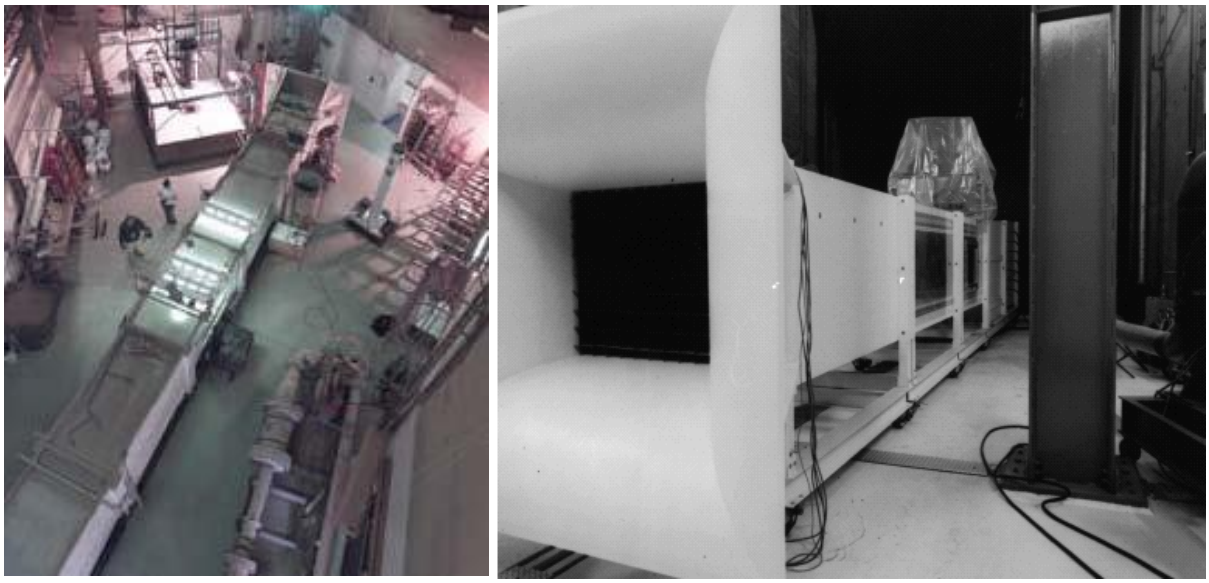

Figure 9-13 Left, Top view MARSWIT PAL Wind Tunnel, one side view.

9.2.8.2 Marswit Specifications

- Pressure ranging from 3 mbar to 1 bar.
- Evacuation to 5.5 mbar in 45 minutes
- Gas: Air.
- Wind velocity ranging from 0 to 12 m/s at 1 bar and up to 150 m/s at 3 mbar pressure.
- Ambient Temperature.

9.2.9 Mars Environmental Simulation Chamber

This chamber is currently being developed at CAB and will be in operation in February of 2008. It will be used for radiation tests for the wind sensor. For information about the chamber see 8.5.3.

9.3 TEST AND PROCEDURES

The WS tests will be carried out on the FM (and its spares) and the EM2-3. A number of tests will be carried out on both models, while the rest only in one type of model. The reason for this is that tests done on both FMs and EMs are necessary for the characterization of each particular model and to ensure the same response on both FM models and EM (electronics, heat conduction characteristics, etc.) Tests run only on EM2-3 are intended to characterize the aerodynamic response of the WS, which combined with the other tests will give the full response of the FM model (or of the spares if necessary).

Additionally CFD simulations are needed for the calibration of the sensor, these are also included in this section under the designation of Calibration Simulations.
An overview of the calibration and test requirements is given in
Table 9-4 and Table 9-5. A detailed description of the requirements is provided in the subsequent sections of this chapter.

9.3.1 Schedule

The time schedule of the planned tests and simulations, as well as the number of people necessary for each test is given in Table 9-7, all data presented there is preliminary and will be confirmed in the near future.

Test ID	Test Name	Model	Tested Item	Environmental Conditions	Location	Objective	Test Order & Priority
WS_T1	Resistor Temperature Coefficient	Resistors from the same batch as EMs and FMs and spares	4 Dice mounted on PCB board	- Air - P=1013 mbar - Temperature from 203 K to 343 K w. 10K intervals	Isothermal Chamber (INTA)	Determination of the temperature coefficients of the resistors alloys: $2^{nd}/3^{rd}$ order coeffs: α_1, α_2, α_3	1 (HIGH)
WS_T2	Dice Resistors Ohmic Measurement	EM2-3 FM1-2 Spares 1-2	- Dice - PCB - Boom	- Air - P=1013 mbar -Temperature: Ambient	----------	Measurements of the resistor values before and after mounting of the dice on the transducer	2 (HIGH)
WS_T3	Dice Heat Loss Estimation	EM2-3 FM1-2 Spares 1-2	Boom	-Vacuum -Ambient Temperature: 180K:20K:320K	Thermal Vacuum Chamber (CRISA)	Estimation of the conduction heat loss to boom by mounting a boom in vacuum chamber.	4 (HIGH)
WS_T4	Dice Heat Loss Estimation on PCB	Independent PCB	PCB	-Vacuum -Ambient Temperature: 180K:20K:320K	Thermal Vacuum Chamber (CRISA)	Estimation of the conduction heat loss to board in vacuum chamber.	3 (LOW)
WS_T5	2D PCB Local Components Calibration	Independent PCB	PCB	-CO_2 -P Range: 12-1013 mbar -Temperature: 298K	Mars Simulation Linear Tunnel (CAB-INTA)	Calibration of the wind sensor response to different speeds and directions to relate: Glong,Gtrans ↔ V, pitch, yaw	12 (LOW)
WS_T6	Boom Local Components Calibration	EM2-3	Boom	-CO_2 -P Range: 12-1013 mbar -Temperature: 298K	Mars Simulation Linear Tunnel (CAB-INTA)	Calibration of the wind sensor response to different speeds and directions to relate: Glong,Gtrans ↔ V, pitch, yaw	8 (HIGH)
WS_T7	Reduced CamMast & Boom Local Components Calibration	EM2-3	Mast + two Booms	-CO_2 -P Range: 12-1013 mbar -Temperature: 298K	Mars Simulation Linear Tunnel (CAB-INTA)	Verification of the calibration function with real CamMast +boom. And verify effect of two booms acquisition criteria.	10 (MEDIUM)
WS_T8	Scaled Wind Sensor in Rover	Scaled Rover + Wind Sensor Dummy	Scaled Model	-Air -P: 1013 mbar -Temperature: 298K	Aerodynamic Wind Tunnel N3 (INTA)	Validation of the rover EFDLab simulations by measuring wind speed and Reynolds number in transducer locations of scaled rover+sensor	11 (MEDIUM)
WS_T9	Marslab Wind Tunnel Calibration	Facility (Marslab wind tunnel)	Boom Dummy	-CO_2 -P=7 mbar -Temperature: 243K, 273K	Marslab (Aarhus University)	Calibration of the wind speed and direction of flow in the wind tunnel	5 (LOW)

Test ID	Test Name	Model	Tested Item	Environmental Conditions	Location	Objective	Test Order & Priority
				and 303K			
WS_T10	Temperature Compensation Algorithm	EM2-3	Boom	-CO_2 -P=7 mbar -Temperature: 243K, 273K, 303K	Marslab (Aarhus University)	Verification and validation of the temperature compensation algorithm	6 (LOW)
WS_T11	Solar Radiation	EM2-3	Boom	-CO_2 -P Range: 12-1013 mbar -Temperature: 298K -550W/m^2 radiation	Mars Simulation Linear Tunnel (CAB-INTA)	Verification of the solar radiation effect on the wind sensor	13 (MEDIUM)
WS_T12	Time Response	EM2-3	Boom	-CO_2 -P Range: 12-1013 mbar -Temperature: 298K	Mars Simulation Linear Tunnel (CAB-INTA)	Determination of the time response of the wind sensor	9 (MEDIUM)
WS_T13	Pressure Compensation Ratio	EM2-3	Boom	-CO_2 - Several pressures in the 12-1013 mbar range -Temperature: 298K	Mars Simulation Linear Tunnel (CAB-INTA)	Verification of the validity of the pressure compensation ratio (using Re instead of speed)	7 (HIGH)

Table 9-4 WS Testing Calibration

Simulation ID	Simulation Name	Tested Item	Environmental Conditions	Brief Description	Simulation Order & Priority
WS_S1	Boom Local Components Comparison Simulation	Boom	-CO_2 -P=7 mbar -Temperature: 298K	Simulation of boom in wind tunnel to relate: Glong, Gtrans (sim) ↔ Glong, Grans (real)	1 (HIGH)
WS_S2	2D PCB Local Components Comparison Simulation	PCB	-CO_2 -P=7 mbar -Temperature: 298K	Simulation of PCB in wind tunnel to relate: Glong, Gtrans ↔ Glong, Gtrans	2 (LOW)
WS_S3	Reduced CamMast & Boom Local Components Comparison Simulation	Mast + two Booms	-CO_2 -P=7 mbar -Temperature: 298K	Simulation of 2 booms+ CamMast in wind tunnel to verify Glong & Gtrans functions, and double acquisition	3 (MEDIUM)
WS_S4	Rover & Scaled Model Comparison Simulation	Rover + Mast + two Booms	-CO_2 -P=7 mbar -Temperature: 298K	Simulation of booms+ CamMast +rover: to verify scaled model	4 (MEDIUM)
WS_S5	Inverse Model Mesh Generation	Rover + Mast + two Booms	-CO_2 -P=7 mbar -Temperature: 243K	Simulation of booms+ CamMast +rover to build boom selection algorithm and study rover effect in the wind flow	5 (HIGH)

Table 9-5 Wind Sensor Simulations

Test ID	Test Name	Model	Tested Item	Environmental Conditions	Location	Brief Description	Test Priority
WS_IT1	Functional	EM2-3 FM1-2 QM1-2	Boom	-Air/CO_2 - P=3-20 mbar -Temperature: Ambient	Functional Low Density CO_2 Discharge Facility (CRISA)	Verification of the behaviors of EMs and FMs and health check	HIGH

Table 9-6 Other Tests

Test ID	Test Name	Days	People	Status (C:Confirmed) (TBC:To be Confirmed)
WS_T1	Resistor Temperature Coefficient	10	2	C
WS_T2	Dice Resistors Ohmic Measurement	1	1	C
WS_T3	Dice Heat Loss Estimation	10	3	C
WS_T4	Dice Heat Loss Estimation on PCB	2½	3	C
WS_T5	2D PCB Local Components Calibration	7	5	TBC
WS_T6	Boom Local Components Calibration	20	5	TBC
WS_T7	Reduced CamMast & Boom Local Components Calibration	3.5	5	TBC
WS_T8	Scaled Wind Sensor in Rover	1	5	TBC
WS_T9	Marslab Wind Tunnel Calibration	8	4	C
WS_T10	Temperature Compensation Algorithm	1	5	C
WS_T11	Solar Radiation	5	4	TBC
WS_T12	Time Response	½	5	TBC
WS_T13	Pressure Compensation Ratio	½	5	TBC
WS_IT1	Functional	Each time: 1 day	3	C

Table 9-7 WS Testing Campaigns Duration

Simulation ID	Simulation Name	Days	People
WS_S1	Boom Local Components Comparison Simulation	30	2
WS_S2	2D PCB Local Components Comparison Simulation	15	2
WS_S3	Reduced CamMast & Boom Local Components Comparison Simulation	21	2
WS_S4	Rover & Scaled Model	3	2

	Comparison Simulation		
WS_S5	Inverse Model Mesh Generation	100	2

Table 9-8 WS Simulation Campaigns Duration

9.3.2 Calibration Tests

9.3.2.1 Resistor Temperature Coefficient Test

Purpose and description
The purpose of this test is to obtain the resistor temperature coefficients, i.e.: the value of the resistors versus the temperature they are at. This test is necessary because the value of the resistors is used to compute the power consumption.

The tests will be carried out at INTA facilities in the Meteorological and Calibration Department, following the recommendations of EIT-90.

The resistors will be calibrated using an isothermal chamber from 203K to 343K.

To measure the value of the resistors of the dice a four wire method will be used. To measure these values a pre-calibrated equipment will be used (see Supporting Equipment).

Tested Item
PCB Board with 4 dice.

Parameter and range
Resistance value from 203K to 343K

Accuracy
Rx error ±0.01Ohms
R_{HX} error ±0.01Ohms
ΔR error ±0.01Ohms
PT1000 Temperature error ±0.01K

Environment
Isothermal air chamber

Supporting Equipment
Calibrated isothermal chamber
PT1000 calibrated temperature sensor
Calibrated multi-meter KEITHLEY 2010
Commutation matrix KEITHLEY 7700

Calibration report data products
The certificate of calibration will include a table with the resistors' values at different temperatures. Additionally, the polynomial coefficients of the resistor value as a function of temperature will be calculated, including the error introduced by using this function.

9.3.2.2 Dice Resistors Ohmic Measurement Test

Purpose and description
The aim of this test is to verify the resistance values of all resistors (Heater, Sensing and Reference) prior and after the mounting of the PCB on the boom, in order to verify the integrity of the sensor.

Prior to the measurement of the WD-S resistors the equipment will be connected 30 minutes as warm-up to ensure the optimum performance of the measurement instruments. The measurement will be done over a plate, measuring through holes in order to prevent scratching of the ASIC pads.

At the beginning of the test and at its conclusion, it is necessary to take note of the room temperature and room humidity in order to assure the stability and validity of the measurement.
For the test to be valid, it is necessary to record also the temperature and room humidity, to ensure the stability and validity of the measurement as well as because the resistance changes with the surrounding temperature.
This calibration test is identical to a necessary health-check of all boom resistors before and after each handling procedure. These checks are necessary to assure that the quality of the resistors is maintained.

Tested Items

- Dice Alone
- Dice on PCB

Parameter and range
Transducer temperatures should be ambient, approx. 298K
Rx error ±0.01Ohms
R_{HX} error ±0.01Ohms
ΔR error ±0.01Ohms

Accuracy
RHX Resistors ± 0.4Ω
Rx Resistors ± 0.04Ω
ΔR Resistors ± 0.04Ω
Temperature ±0.1K

Environment
Ambient

Supporting Equipment
Calibrated multi-meter DMM KEITHLEY 2000
Calibrated temperature & humidity sensors
Leica Binocular

Requirements
This test will be done on all models: EMs, FMs and spares in order to use them as back ups.

Calibration Report Data Products
The calibration report will include all measurements, times and temperatures. The basic boom check table will be filled and included in the calibration report for each boom.

9.3.2.3 Dice Heat Loss Estimation Test

Purpose and description
The aim of this test is to measure the heat loss through the PCB mounting in the boom housing, in order to include it in the calibration model. This test is done in vacuum to separate the heat transfer to the air from the heat transfer to the solid. The objective is to determine the conduction constants $K_{bondings}$ and $K_{PyrexLegs}$ to include them in the thermal model of the sensor. As it is shown in section 9.1.1 the power injected goes to the air and to the board ($P_{ConductionLoss}$) through the legs and the wire-bondings.

$$\overline{P}_{delivered} = P_{convec} + P_{ConductionLoss} + P_{RadiationLoss}$$

where

$$P_{ConductionLoss} = \left[K_{bondings} \cdot L_1 \cdot (T_{Dice} - T_{Board}) + K_{PyrexLegs} \cdot L_2 \cdot (T_{Dice} - T_{Board})\right]$$

$$P_{RadiationLoss} = K_{rad} \cdot (T_{Dice}^4 - T_{Air}^4)$$

Since the tests will be performed in vacuum, convection and heat conduction through the air can be neglected.

$$\overline{P}_{delivered} = \left[K_{bondings} \cdot L_1 \cdot (T_{Dice} - T_{Board}) + K_{PyrexLegs} \cdot L_2 \cdot (T_{Dice} - T_{Board})\right] + K_{rad} \cdot (T_{Dice}^4 - T_{Air}^4) =$$
$$= (T_{Dice} - T_{Board}) \cdot \left(K_{bondings} \cdot L_1 + K_{PyrexLegs} \cdot L_2\right) = P_{ConductionLoss} + P_{RadiationLoss}$$
$$\overline{P}_{delivered} = K'_{COMBINED} \cdot (T_{Dice} - T_{Board}) + K_{rad} \cdot (T_{Dice}^4 - T_{Air}^4)$$

T_{Board} sensors will be used to give an accurate reading of the temperatures on the PCB directly below each group of four dice. The temperature of the hot dice can be obtained as a function of temperature T_{Ref} and ΔT.

$$T_{Die} = T_{Ref} + \Delta T$$

The boom will be mounted inside the thermal vacuum chamber. The range of different temperatures at which the tests are run is achieved by the thermal control of the chamber. The specific temperature of the boom or PCB is not as important as their stability in the range of temperatures expected during operation on Mars, so that the heat conduction constants can be determined.

The temperature of the thermal vacuum chamber can be controlled by cooling/heating a table on which the item to be tested is mounted on, as well as by controlling the radiative transfer with the chamber walls. As the boom is mounted on the table, its temperature stabilizes by conduction to the table and by radiation exchange with the walls. Therefore by altering the chamber temperature, new temperatures will be achieved on the boom and on the PCB.

Throughout these tests, the wind sensor will be connected at all times.

Tested Item
Boom

Parameter and range
Ambient Temperature: 170K, 200K, 220K, 240K, 260K, 280K, 300K, 320K
The chamber ambient temperature will be measured accurately. Due to this, the temperature values listed above are only approximations because the temperature in the chamber can not be controlled accurately.

Accuracy
PT1000 Board Temperature (TBD)
Vacuum Chamber Temperature ±0.1K
Vacuum Chamber Temperature Stability ±0.5K

Environment
Vacuum: Pressure below 10^{-5} Torr.

Supporting Equipment
Vacuum chamber with temperature control: SERAE TVC-1
Calibrated Thermocouples in boom, table and chamber

Requirements
The calibration will be done to all models: EM2-3, FMs and spares in order for them to be used as back up to the flight model. This test has to be done to all models, as any variation in the fabrication process will produce differences in the conductive constants (K), particularly in the interfaces between parts (glues, soldering, etc…)

The results of test WS_T1 and WS_T2 are necessary for the correct calibration with this test, it is therefore necessary that test WS_T1 is done prior to this one. These results are necessary for the correct calculation of $\overline{P}_{delivered}$, as it is explained in section 9.1.1.

Report Data Products
Digital files with records of PT1000 board temperatures, hot dice temperatures, ASIC temperature and power, hot dice injected power as well as additional temperature measurements by independent sensors (chamber table) will be supplied. With this data, the $K'_{COMBINED}$ and K'_{rad} will be determined, which will have a certain dependence on the temperature range.

9.3.2.4 Dice Heat Loss Estimation Test on PCB

Purpose and description
This test is similar to test WS_T3 excepting that the PCB will not be installed in the boom. In this case the PCB will be mounted on a conductive plate to avoid temperature gradients in the PCB boards. The conductive plate will in turn be mounted to the isothermal chamber table.

This test has LOW priority because it will be used to confirm the results obtained in test WS_T3 and is therefore not strictly necessary for the sensor characterization.

Tested Item
PCB

Parameter and range
Ambient Temperature: 170K, 200K, 220K, 240K, 260K, 280K, 300K, 320K
These temperatures represent only target values, and the chamber ambient temperature will be measured accurately.

Accuracy
PT1000 Board Temperature (TBD)
Vacuum Chamber Temperature ±0.1K
Vacuum Chamber Temperature Stability ±0.5K

Environment
Vacuum: Pressure below $1.33 \cdot 10^{-3}$Pa

Supporting Equipment
Vacuum chamber with temperature control: SERAE TVC-1
Calibrated Thermocouples

Requirements
The results of test WS_T1 and WS_T2 are necessary for the correct calibration with this test, it is therefore necessary that test WS_T1 is done prior to this one. These results are necessary for the correct calculation of $\overline{P}_{delivered}$, as it is explained in section 9.1.1.

Report Data Products
Digital files with records of PT1000 board temperatures, hot dice temperatures and hot dice injected power as well as additional temperature measurements by independent sensors (chamber table) will be supplied. With this data, the previously calculated $K'_{COMBINED}$ and K'_{rad} will be verified.

9.3.2.5 2-D PCB Local Components Calibration Test

Purpose and description

The aim of this test is to establish the relationship between the Glong & Gtrans estimators of the wind sensor transducers to the free stream wind speed and wind flux incident angles (yaw and pitch). The relationship of the Glong and Gtrans estimators to the local vertical wind component will also be tested (with pitch angles other than zero.)

A pan and tilt device will be used to achieve the yaw and pitch rotations of a single PCB. The tests will be run at constant ambient temperature; various yaw and pitch angles, as well as at a list of speeds. A test is the recording of 10 readings from all three transducers at a given angular configuration and speed (Temperature and Pressure constant). Likewise, the ambient temperature and pressure will be recorded during the entire test.

The priority of this test is LOW because its aim is to verify the results from test WS_T6 and clarify any issues which might arise during the matching of that test and simulations WS_S1.

Tested Item
PCB

Parameter and range
In both ranges, the testing speeds and pressures have been calculated so that the same Reynolds number is obtained as for the original list of equivalent speeds at pressure 7mbar. Due to the restrictions in the size of the Mars Simulation Linear Tunnel, and therefore the restrictions on the maximum testing speed (0,55m/s), the tests are done modifying both the pressure and the rail speed (up to the 0,55m/s limit).

- Low Speed Range:
  - Pitch: -15°, 0°, 15°.
  - Yaw: -160°, -140°, -120°, -100°, -80°, -60°, -40°, -20°, 0°, 20°, 40°, 60°, 80°, 100°, 120°, 140°, 160°, -180°.
  - Equivalent Speed (m/s) at pressure 700Pa (7mbar)*:0, 1, 2.5, 3.75, 5, 6.25, 7.5, 8.75, 10, 11.25, 12.5, 13.75, 15, 16.25, 17.5, 18.75, 20.
  - Testing Speed and Pressures (m/s; Pa): (0; 700), (0.5; 1400), (0.25; 7000), (0.25; 10500), (0.5; 7000), (0.25; 17500), (0.5; 10500), (0.35; 17500), (0.4; 17500), (0.45; 17500), (0.5; 17500), (0.55; 17500), (0.3; 35000), (0.35; 32500), (0.35; 35000); (0.35; 37500), (0.2; 70000)

  (*): Speeds 0m/s-10m/s: Tested at all pitch angles. For higher speeds, only tested in those cases in which the absolute vertical wind projection is below 10m/s.
- High Wind Speed Range:
  - Pitch: -15°, 0°, 15°. These pitch angle mesh will be used only if the resulting vertical component is less than 10 m/s.
  - Yaw: -160° to +180° with 20° intervals
  - Equivalent Speed (m/s) at pressure 700Pa: 25, 30, 35, 40, 45, 50, 55, 60, 65, 70.
  - Testing Speed and Pressures (m/s; Pa): (0.25; 70000), (0.3; 70000), (0.35; 70000), (0.4; 70000), (0.45; 70000), (0.5; 70000), (0.55; 70000), (0.5; 84000), (0.5; 91000), (0.55; 89090)

Accuracy
TBD

Environment
CO_2, P= 700: 90000 Pa, Temperature=298K

Supporting Equipment
Mars Simulation Linear Tunnel (CAB-INTA)
Pan and Tilt Unit: Directed Perception model PTU-46-70

Requirements

The pressure and temperature readings should be recorded simultaneously with each wind transducer reading. Likewise, each data file should include the pitch and yaw angles, speed, pressure and temperature, and should follow the naming convention included in Document CAB-REMS-TRT-0004.

Calibration Report Data Products
The equipment should be positioned on a leveled table. The linear positioning system must also be protected with a housing so that no external wind interference affects the readings. To ensure the wind inside the housing is truly zero after running a test, at least 60 seconds must pass before running the next test.

The calibration report will include all files with all the individual readings taken during the campaign, the calibration constants for obtaining the Glong & Gtrans of each transducer, and finally a database including the mean Glong & Gtrans of the three transducers for each test.

9.3.2.6 Boom Local Components Calibration Test

Purpose and description
The objective of this test is to produce all the points of the calibration Database that will be the basis for the Inverse algorithm for the retrieval of the wind speed and direction.

A pan and tilt device will be used to achieve the yaw and pitch rotations of the boom. The tests will be run at constant ambient temperature; various yaw and pitch angles, as well as at a list of speeds. A test is the recording of 10 readings from all three transducers at a given angular configuration and speed (Temperature and Pressure constant). Likewise, the ambient temperature and pressure will be recorded at all times and incorporated into the files with the readings.

Tested Item
Boom

Parameter and range
In both ranges, the testing speeds and pressures have been calculated so that the same Reynolds number is obtained as for the original list of equivalent speeds at pressure 7mbar. Due to the restrictions in the size of the Mars Simulation Linear Tunnel, and therefore the restrictions on the maximum testing speed (0,55m/s), the tests are done modifying both the pressure and the rail speed (up to the 0,55m/s limit).

- Low Speed Range:
  - Pitch: -90°, -75°, -60°, -45°, -30°, -15°, 0°, 15°, 30°, 45°, 60°, 75°, 90°. (TBC)
  - Yaw: -120°, -105°, -90°, -75°, -60°, -45°, -30°, -15°, 0°, 15°, 30°, 45°, 60°, 75°, 90°, 105°, 120°,.
  - Equivalent Speed (m/s) at pressure 700Pa*:0, 1, 2.5, 3.75, 5, 6.25, 7.5, 8.75, 10, 11.25, 12.5, 13.75, 15, 16.25, 17.5, 18.75, 20.
  - Testing Speed and Pressures (m/s; Pa): (0; 700), (0.5; 1400), (0.25; 7000), (0.25; 10500), (0.5; 7000), (0.25; 17500), (0.5; 10500), (0.35; 17500), (0.4; 17500), (0.45; 17500), (0.5; 17500), (0.55; 17500), (0.3; 35000), (0.35; 32500), (0.35; 35000); (0.35; 37500), (0.2; 70000)

  (*): Speeds 0m/s-10m/s: Tested at all pitch angles. For higher speeds, only tested in those cases in which the absolute vertical wind projection is below 10m/s.
- High Wind Speed Range:
  - Pitch: -30°, -15°, 0°, 15°, 30°. These pitch angle mesh will be used only if the resulting vertical component is less than 10 m/s.
  - Yaw: -120°, -105°, -90°, -75°, -60°, -45°, -30°, -15°, 0°, 15°, 30°, 45°, 60°, 75°, 90°, 105°, 120°,.
  - Equivalent Speed (m/s) at pressure 700Pa: 25, 30, 35, 40, 45, 50, 55, 60, 65, 70.
  - Testing Speed and Pressures (m/s; Pa): (0.25; 70000), (0.3; 70000), (0.35; 70000), (0.4; 70000), (0.45; 70000), (0.5; 70000), (0.55; 70000), (0.5; 84000), (0.5; 91000), (0.55; 89090)

- Random Tests: They will amount to at least a 15% of extra points in relation to the mesh points
    - Pitch: Intermedidate Pitch angles
    - Yaw: Intermediate Yaw angles.
    - Intermediate Speed (m/s) at pressure 700Pa

Accuracy
TBD

Environment
CO_2, P= 700: 90000 Pa, Temperature=298K

Supporting Equipment
Mars Simulation Linear Tunnel (CAB-INTA)
Pan and Tilt Unit: Directed Perception model PTU-46-70

Requirements
The pressure and temperature readings should be recorded simultaneously with each wind transducer reading. Likewise, each data file should include the pitch and yaw angles, speed, pressure and temperature, and should follow the naming convention included in Document CAB-REMS-TRT-0004.

Calibration Report Data Products
The calibration report will include all files with all the individual readings taken during the campaign, the calibration constants for obtaining the Glong & Gtrans of each transducer, and finally a database including the mean Glong & Gtrans of the three transducers for each test.
With these results the CDB of the Inverse Algortihm will be built and will be tested with random tests carried out in this test, with non-mesh points.

9.3.2.7 Reduced CamMast & Boom Local Components Calibration Test

Purpose and description
The objective of this test is to verify the relationship between the Glong & Gtrans estimators of the wind sensor transducers in the case of the wind flow affected by the RSM and the second boom. Additionally this test will verify the effect of the presence of a second boom when making readings with the wind sensor. It will be used to verify the boom selection algorithm developed using data from Simulations WS_5 Again, these tests will be compared with simulations designed to reproduce the conditions of the test..

A pan and tilt device will be used to achieve the yaw rotations of the CamMast and booms. The tests will be run at constant ambient temperature, various yaw angles, as well as at a list of speeds. A test is the recording of 10 readings from all six transducers (three per boom) at a given angular configuration and speed (Temperature and Pressure constant). Likewise, the ambient temperature and pressure will be recorded at all times and incorporated in the readings files.

Tested Item
Reduced mast model with two booms.

Parameter and range
- Low Wind Speed Range:
    - Yaw: -160°, -140°, -120°, -100°, -80°, -60°, -40°, -20°, 0°, 20°, 40°, 60°, 80°, 100°, 120°, 140°, 160°, -180°.
    - Pitch: 0°.

  - Equivalent Speed (m/s) at pressure 700Pa:0, 1, 2.5, 3.75, 5, 6.25, 7.5, 8.75, 10, 11.25, 12.5, 13.75, 15, 16.25, 17.5, 18.75, 20.
  - Testing Speed and Pressures (m/s; Pa): (0; 700), (0.5; 1400), (0.25; 7000), (0.25; 10500), (0.5; 7000), (0.25; 17500), (0.5; 10500), (0.35; 17500), (0.4; 17500), (0.45; 17500), (0.5; 17500), (0.55; 17500), (0.3; 35000), (0.35; 32500), (0.35; 35000); (0.35; 37500), (0.2; 70000).
- High Wind Speed Range:
  - Yaw: -160° to +180° with 20° intervals
  - Pitch: 0°.
  - Equivalent Speed (m/s) at pressure 700Pa: 25, 30, 35, 40, 45, 50, 55, 60, 65, 70.
  - Testing Speed and Pressures (m/s; Pa): (0.25; 70000), (0.3; 70000), (0.35; 70000), (0.4; 70000), (0.45; 70000), (0.5; 70000), (0.55; 70000), (0.5; 84000), (0.5; 91000), (0.55; 89090)

Accuracy
TBD

Environment
CO_2, P= 700: 91000 Pa, Temperature=298K

Supporting Equipment
Mars Simulation Linear Tunnel (CAB-INTA)
Pan and Tilt Unit: Directed Perception model PTU-46-70

Requirements
The pressure and temperature readings should be recorded simultaneously with each wind transducer reading. Likewise, each data file should include the pitch (in this case 0º) and yaw angles, speed, pressure and temperature, and should follow the naming convention included in Document CAB-REMS-TRT-0004.

Calibration Report Data Products
The calibration report will include data files with all the individual readings taken during the campaign, the calibration constants for obtaining the Glong & Gtrans of each transducer, and finally a database including the mean Glong & Gtrans of the six transducers for each test.
The results will be analysed in combination with the results of simulations WS_S3 and WS_S5, to verify the validity of the simulations and of the boom selection algorithm.

9.3.2.8 Scaled Wind Sensor in Rover Test (TBC)

Purpose and description
This test is designed to verify the validity of the equivalency between the rover EFDLab simulations and an aerodynamic dummy: a model of the rover (in scale S=1:44) including the CamMast. It is necessary to use a scaled model of the rover, in order to be able to test it in a wind tunnel. The basis of this test is to use the equivalency between the Reynolds number in the scaled model of the rover and the full size rover, one in Earth conditions and the other in Martian conditions, although with the same Reynolds numbers. There will be no heating of the dummy as the aim of the test is purely aerodynamic. , introducing in this way no differences in the Nusselt numbers. On the other hand, if the wind speed is high enough, natural convection effects can also be ignored.
The wind speed will be measured in various locations of the same plane as the wind transducers' boards.
The test will be carried out ensuring the Reynolds number equivalency, as the scale is S=1:44 and $\mathrm{Re}_L = \frac{\rho U L}{\mu}$, (where the gas is air at Earth pressure, producing certain density and viscosity values), the table relating the scaled rover speed and the simulated speed (and conditions) is the following:

	Earth Testing Conditions & Speeds		**Mars Simulations Conditions & Speeds**	
	Pressure (Pa)	10^5	Pressure (Pa)	700
	Temperature (K)	298	Temperature (K)	223
Reynolds	**Wind Speeds (m/s)**		**Wind Speeds (m/s)**	
16379	5		5,1	
24568	7,5		7,65	
32757,5	10		10,2	
49136	15		15,31	
65515	20		20,41	
98272,5	30		30,62	
131030	40		40,82	

Table 9-9 Earth Testing Conditions & Speeds correspondence with Mars Conditions & Speeds for the same Reynolds number

Tested Item
Scaled Model

Parameter and range
Yaw: -120º, -80°, -40°, 0°, 40°, 80°, 120°, 160°
Speed (m/s): 5, 7.5, 10, 15, 20, 30, 40.

Accuracy
TBD

Environment
Air, P=10^5 Pa, Temperature=298K

Supporting Equipment
TBD: Aerodynamic Tunnel (INTA)
Pan and Tilt Unit: Directed Perception model PTU-46-70
Ambient Temperature Sensor
TBD: 2-Dimensional LDA

Requirements
The pressure and temperature readings should be recorded simultaneously with each wind speed reading. Likewise, each data file should include the pitch (in this case 0°) and yaw angles, speed, pressure and temperature, and should follow the naming convention included in Document CAB-REMS-TRT-0004.

Report Data Products
The calibration report will include data files with all the readings of the anemometers located on the model and in other places of the chamber. The final product will be a database including the mean speeds recorded by each of the six wind sensors in each test.
In combination with the results of simulations WS_S4, the equivalent speeds will be verified.

9.3.2.9 Marslab Wind Tunnel Calibration Test

Purpose and description

The aim of this test is to characterize the wind tunnel that will be used for additional calibrations of the wind sensor. This wind speed (magnitude and direction) and temperature field on the test section of the wind tunnel will be characterized. The tunnel will be calibrated with a boom dummy inside to ensure that an alteration of the wind flow speed (theoretically the effective wind at an infinite distance from the sensor) provoked by the presence of the wind sensor is accounted for.
If test 9.3.2.10 is reduced to only a yaw angle, this test will be reduced and the calibration will be characterized only for that yaw.

Tested Item
Tunnel with Boom Dummy

Parameter and range
The wind flow will vary in speed from 1m/s to 20m/s, and the area of the tunnel to be calibrated will be of width=280mm and height=120mm
Temperature: 253 K, 273K, 298K

Accuracy
TBD: High accuracy readings with LDA (Laser Doppler Anemometry)

Environment
CO_2
Pressure: 700 Pa
Temperature: 253 K, 273K, 298K

Supporting Equipment
2-Dimensional LDA (Lateral Window)
1-Dimensional LDA (Bottom Window)

Requirements
TBD

Report Data Products
The flow speed (magnitude and direction) at the test section of the wind tunnel will be correlated with rpm of its fan. The sensitivity of the flow speed with temperature will also be studied.

9.3.2.10 Temperature Compensation Algorithm

Purpose and description
The aim of this test is to ratify the algorithm for the compensation of the temperature variation effect on the wind sensor (the use of adimensionalized magnitudes by means of composing the Glong and Gtrans components with the Prandtl number, the gas conductivity and the dice skin temperature). Several tests will be carried out at different temperatures. The tests will cover a previously calibrated section of the wind tunnel. Tests at different yaw angles and wind speeds (as well as temperatures) will be run. In this case the boom with the wind sensor will be tested alone, without the CamMast dummy to reduce all risks to a minimum. The boom will be rotated by means of a pan and tilt device, although only the pan mechanism will be employed, as the tests will be done at one constant pitch angle (horizontal).

Tested Item
Boom

Parameter and range
Tests will be conducted at the following temperatures: 253K, 273K, 298K.
Flow Speeds (m/s): 0, 1, 2.5, 3.75, 5, 6.25, 7.5, 8.75, 10, 11.25, 12.5, 13.75, 15, 16.25, 17.5, 18.75, 20.
Yaw: -20°, 0°, 20°.
Temperature: 253 K, 273K, 298K

Accuracy
TBD

Environment
CO_2
Pressure: 700Pa
Temperature: 253 K, 273K, 298K

Supporting Equipment
Pan and Tilt Unit: Directed Perception model PTU-46-70
Additional calibrated temperature sensors.

Requirements
Test WS_T9 and the characterization of the air temperature in the testing section must be performed before this test.
The pressure and temperature readings should be included for each wind transducer reading. Likewise the title of all files should include the pitch (in this case pitch=0º in all cases) and yaw angles, speed, pressure and temperature, and should follow the naming convention included in Document CAB-REMS-TRT-0004.

Report Data Products
The test report will include data files with all the individual readings taken during the test campaign, the calibration constants for obtaining the Glong & Gtrans of each transducer, and finally a database including the mean Glong & Gtrans of the three transducers for each test. An additional report with the sensitivity of the test results to temperature variations will be assessed while maintaining the wind direction and speed constant.

9.3.2.11 Solar Radiation (TBC)

Purpose and description
The objective of this test is to determine the effect of the solar radiation on wind measurements. Solar radiation at the top of the Martian atmosphere reaches peak values ranging from 500 to 700 W/m^2.
Previous tests show that to some extent solar radiation affects the wind measurement, and therefore it is necessary to obtain an upper-bound estimate of the error induced by radiation.
With this objective, three tests will be performed:

- Rough Sampling Test: To confirm that changes in the incidence angle of the direct radiation (all die receive radiation, i.e. no shadows) doesn't affect the wind measurement.
- Thin Sampling Test: To establish the validity or non-validity of the wind measurements when the direct radiation incidence angle is such that the front dice project shadows on neighboring dice.
- Partial Shadow Test: To obtain an upper-bound estimate of the error induced by partial direct radiation (not all dice of the same board receive radiation) or an invalidation criteria of the wind measurements under these circumstances.

The tests will be performed without wind in the Mars Simulation Linear Tunnel at CAB. Previously calibrated Xenon (TBC) lamps (spotlights) lamps will simulate the direct sun radiation, so that at the distance at which they are located they supply the equivalent Martian surface direct radiation. Additional lamps and diffusers (stagelight projectors featured with diffusers) will be placed surrounding the facility (made of Plexy-glass) to simulate simultaneously the diffuse radiation received by the sensors on Mars.

The tests will verify whether the radiation has altered or not the local components estimators (Glong & Gtrans). In the case the effect is significant, either an upper-bound error due to radiation will be calculated or a criterion for discarding non-valid measurements will be established.

Tested Item
Boom

Parameter and range
The diffuse/direct pairs are given in Table 9-10 (in W/m²) with the diffuse irradiances in the first column and the associated direct beam irradiances given in boldface, in each corresponding row. The diffuse irradiance ranges from 30 W/m² to 360 W/m² while the direct beam irradiances range from 5 W/m² to 500 W/m² . From this table, 5 testing lists will be selected (including the cases of maximum and minimum diffuse irradiance).

	Diffuse Irradiance (W/m2)	**Direct Irr. 1 (W/m2)**	**Direct Irr. 2 (W/m2)**	**Direct Irr. 3 (W/m2)**	**Direct Irr. 4 (W/m2)**	**Direct Irr. 5 (W/m2)**	**Direct Irr. 6 (W/m2)**	**Direct Irr. 7 (W/m2)**	**Direct Irr. 8 (W/m2)**	**Direct Irr. 9 (W/m2)**	**Direct Irr. 10 (W/m2)**	**Direct Irr. 11 (W/m2)**
List1 Possible Diffuse/Direct Irradiance Pairs	30	**100**										
List2 Possible Diffuse/Direct Irradiance Pairs	40	**120**	**400**									
List3 Possible Diffuse/Direct Irradiance Pairs	50	**5**	**50**	**70**	**500**							
List4 Possible Diffuse/Direct Irradiance Pairs	60	**10**	**30**	**200**	**600**							
List5 Possible Diffuse/Direct Irradiance Pairs	70	**10**	**15**	**40**								
List6 Possible Diffuse/Direct Irradiance Pairs	80	**5**	**80**	**100**	**200**	**300**						
List7 Possible Diffuse/Direct Irradiance Pairs	100	**5**	**80**	**100**	**200**	**300**						
List8 Possible Diffuse/Direct Irradiance Pairs	120	**10**	**30**	**40**	**50**	**60**	**120**	**160**	**400**			
List9 Possible Diffuse/Direct Irradiance Pairs	140	**15**	**30**	**50**	**60**	**100**	**140**	**280**	**500**			
List10 Possible Diffuse/Direct Irradiance Pairs	160	**10**	**15**	**40**	**50**	**60**	**80**	**100**	**160**	**220**	**320**	**500**

List11 Possible Diffuse/Direct Irradiance Pairs	180	**5**	**10**	**50**	**60**	**70**	**120**	**180**	**240**	**360**		
List12 Possible Diffuse/Direct Irradiance Pairs	200	**15**	**20**	**40**	**50**	**100**	**120**	**160**	**200**	**400**		
List13 Possible Diffuse/Direct Irradiance Pairs	220	**15**	**20**	**40**	**50**	**100**	**120**	**160**	**200**	**400**		
List14 Possible Diffuse/Direct Irradiance Pairs	240	**20**	**80**	**120**	**160**	**200**	**240**	**320**	**400**			
List15 Possible Diffuse/Direct Irradiance Pairs	260	**5**	**30**	**180**	**260**	**340**						
List16 Possible Diffuse/Direct Irradiance Pairs	280	**30**	**70**	**140**	**180**	**220**						
List17 Possible Diffuse/Direct Irradiance Pairs	300	**20**	**30**	**80**	**120**	**240**	**300**					
List18 Possible Diffuse/Direct Irradiance Pairs	320	**120**										
List19 Possible Diffuse/Direct Irradiance Pairs	360	**140**	**120**	**50**								

Table 9-10 Diffuse and Direct Irradiance Pairs (TBC)

For all tests, the diffuse radiation will be constant. Additionally directed halogen lamps will be placed inside the chamber with a varying irradiance as depicted in Table 9-10 and a controlled incidence angle for the following tests:

- Rough Sampling Test: (TBC)
  Incidence Angles= 0°, 15°, 30°, 45°, 60°, 75°.
-Thin Sampling Test: (TBC)
  Incidence Angles = 60°: 1°: 90°
-Partial Shadow Test: (TBC)
  Incidence Angle=0°
  Shadowed Dice=1, 2, 3.

Accuracy

The radiation will be stable in time (testing time= 100s).

Environment
CO_2
Pressure: 700Pa
Temperature: 298K

Supporting Equipment
Mars Simulation Linear Tunnel (CAB-INTA)
TBC: Halogen Lamps/Xenon Lamps (spotlights and projectors) – Previously calibrated in SPASOLAB (INTA)
Rotational Lamp Support controlled by DC stepper motor.
Radiation Diffusers

Requirements
Xenon lamps must be calibrated because they must be substituted once they reach 1/10th of the manufacturer's specified lifetime, to avoid intensity variations and color temperature drift due to aging.
A test without radiation will also be performed, as a comparison basis of the rest of the tests.
The pressure and temperature readings should be included for each wind transducer reading. Likewise the title of all files should include the kind of radiation test performed as well as either the radiation incidence angle or the shadowed dice. Temperature and pressure readings will also be included.

Report Data Products

The report will include all files with all the individual readings taken during the campaign, the calibration constants for obtaining the Glong & Gtrans of each transducer, and a database including the mean Glong & Gtrans of the three transducers for each test.
Comparing the results obtained in the test without radiation with all the radiation tests, an upper-bound error due to radiation will be calculated. In case the error is of greater significance than the reading itself, the solar incidence angle range for which this occurs will be determined, giving in this case a criterion for discarding non-valid measurements during operations.

9.3.2.12 Time Response Test

Purpose and description

The aim of this test is to determine the time response of the wind sensor.
Two tests are planned:

- Angular Rotation Time Response Test: A pan and tilt device will be used to simulate a change in the wind direction in various sensors' locations. The test will be carried out with only one boom, which will be subject to a rotation in yaw from -30° to +30°. The rotation speed of the pan and tilt unit will be set to its maximum value (60°/sec) in order to determine the time response of the sensor. These tests will be done at several wind speeds. This test will consist of 20 readings: 10 initial readings will be taken at the yaw angle =-30°, and 10 additional readings at yaw angle +30°. In this way, the estimation of the response time will be done by using as baseline signals the first and last 8 readings (converted to Glong & Gtrans estimators).
- Speed Ramp Response Test: An acceleration ramp (of less than 1second) will be programmed to the Linear Motion Unit, to simulate a sudden increase in the wind speed (as similar as possible to a step increase in the wind speed.) All tests will be done at constant pressure, increasing only the speed of the unit. The chosen speeds-pressures allow an acquisition of a minimum of 12 readings from the beginning to the end of the test (already eliminating the initial acceleration ramp and final deceleration ramp). In this way, the estimation of the response time will be done by using as baseline signals the first and last 5 readings (converted to Glong & Gtrans estimators).

The priority level of this test is set to MEDIUM instead of HIGH because simple time response tests have already been performed, showing a preliminary acceptable value (See document: RD21).

Tested Item
Boom

Parameter and range
Temperature: 298K

- Angular Rotation Time Response Test:
  Yaw Rotations: -30°:+30°
  Equivalent Speed (m/s) at pressure 7mbar: 2.5, 5, 7.5, 10, 15, 20.
  Testing Speed and Pressures (m/s; Pa): (0.25; 700), (0.25; 14000), (0.25; 21000), (0.25; 28000), (0.25; 42000), (0.25; 56000).

- Speed Ramp Response Test:
  Yaw: -30°, 0°, +30°
  Equivalent Speed Ramps (m/s) at pressure 700 Pa: [2.5→10], [5→10], [5→20], [10→20].
  Testing Speed and Pressures (m/s; Pa): [(0.1; 17500)→(0.4; 17500)], [(0.2; 17500)→(0.4; 17500)], [(0.1; 35000)→(0.4; 35000)], [(0.2; 35000)→(0.4; 35000)].

Accuracy
TBD

Environment
CO_2
Pressure: 7000-56000 Pa
Temperature: 298K

Supporting Equipment
Mars Simulation Linear Tunnel (CAB-INTA)
Pan and Tilt Unit: Directed Perception model PTU-46-70 (Using LabView).

Requirements
The pressure and temperature readings should be included for each wind transducer reading. Likewise the title of all files should include the two yaw angle limits, the wind speed, pressure and temperature, and should follow the naming convention included in Document CAB-REMS-TRT-0004.

Calibration Report Data Products
The calibration report will include all files with all the individual readings taken during the campaign, the calibration constants for obtaining the Glong & Gtrans of each transducer, and finally all files with the readings converted to Glong & Gtrans. The files will contain an initial and final timestamp to correlate it with the timing of the rotation so as to compare the file produced by the LabView program controlling the pan and tilt unit.
The final report will contain an evaluation of the response time of the sensor at all speeds and yaw angles for both tests.

9.3.2.13 Pressure Compensation Ratio Test

Purpose and description

The aim of this test is to verify the validity of the Pressure Normalization Ratio, i.e. the compensation of pressure variations., which in effect is equivalent to using the Reynolds number as an estimate of wind speed.

The same tests will be performed at different pressures. The tests will be done at three pressures for each speed. The tests will be run at constant ambient temperature; three yaw angles, as well as at a list of speeds. A test is the recording of 10 readings from all three transducers at a given angular configuration and speed (Temperature and Pressure constant). Likewise, the ambient temperature and pressure will be recorded at all times and incorporated in the readings file.
The priority level of this test is set to HIGH because even though pressure compensation tests have already been performed, showing the validity of the compensation (See document: RD21), the pressure compensation is a top priority of the wind sensor design.

Tested Item
Boom

Parameter and range
These tests were originally intended to be carried out at three pressures (4, 7 and 10 mbar) and at several speeds. Due to the speed restrictions in the tunnel caused by the limited length of the facility, the pressure compensation principle will be tested at three pressures for each speed, so that the equivalency between the three Martian expected pressures and Martian expected wind speeds is maintained at all times.

- Low Wind Speed Range:
  - Yaw: -30°, 0°, 30°.
  - Pitch: 0°.
  - Speed (m/s) and pressure(Pa) table:

Wind Speed Mars (m/s)	Pressure Mars A (Pa)	Pressure Mars B (Pa)	Pressure Mars C (Pa)	Testing Speed (m/s)	Testing Pressure A (m/s)	Testing Pressure B (m/s)	Testing Pressure C (m/s)
0	400	700	1000	0	4	7	10
1	400	700	1000	0,2	20	35	50
2,5	400	700	1000	0,2	50	87,5	125
5	400	700	1000	0,4	50	87,5	125
7,5	400	700	1000	0,4	75	131,25	187,5
10	400	700	1000	0,4	100	175	250
12,5	400	700	1000	0,4	125	218,75	312,5
15	400	700	1000	0,3	200	350	500
17,5	400	700	1000	0,35	200	350	500
20	400	700	1000	0,4	200	350	500

Table 9-11 Low Wind Speed Range Pressure Compensation Test Testing Speeds and Pressures

- High Wind Speed Range:
  - Yaw: -30°, 0°, 30°.
  - Pitch: 0°.
  - Speed (m/s) and pressure (Pa) table:

Wind Speed Mars (m/s)	Pressure Mars A (Pa)	Pressure Mars B (Pa)	Pressure Mars C (Pa)	Testing Speed (m/s)	Testing Pressure A (m/s)	Testing Pressure B (m/s)	Testing Pressure C (m/s)
25	400	700	1000	0,5	200	350	500
30	400	700	1000	0,4	300	525	750
35	400	700	1000	0,5	280	490	700
40	400	700	1000	0,5	320	560	800
45	400	700	1000	0,5	360	630	900

50	400	700	1000	0,55	363,64	636,36	909,09
55	400	700	1000	0,55	400	700	1000
60*	400	700	1000	0,65	369,23	646,15	923,08
65*	400	700	1000	0,7	371,43	650	928,57
70*	400	700	1000	0,75	373,33	653,33	933,33

Table 9-12 High Wind Speed Range Pressure Compensation Test Testing Speeds and Pressures

((*): The speeds with this symbol represent tests in which the number of readings have to be less than 10, and therefore the reliability of the results will be worse.)

Accuracy
TBD

Environment
CO_2
Temperature: 298K

Supporting Equipment
Mars Simulation Linear Tunnel (CAB-INTA)
Pan and Tilt Unit: Directed Perception model PTU-46-70

Requirements
The pressure and temperature readings should be included for each wind transducer reading. Likewise the title of all files should include the yaw angle limit, the wind speed, pressure and temperature, and should follow the naming convention included in Document CAB-REMS-TRT-0004.

Calibration Report Data Products
The calibration report will include all files with all the individual readings taken during the campaign, the calibration constants for obtaining the Glong & Gtrans of each transducer, and finally all files with the readings converted to Glong & Gtrans.
In the final report the validity of the PNRatio (the use of the Reynolds number) will be verified by matching Glong & Gtrans response curves for the same angles at different combinations of speeds and pressures giving the same Reynolds number.

9.3.3 Calibration Simulations

It is worth noting for all simulations, prior to the description of each calibration simulation in detail, that it has already been tested that simulations with identical aerodynamic conditions (the same Reynolds and Prandtl numbers), give the same results. The necessary condition is identical adimensional numbers, not identical wind speeds and pressures.
As a consequence of these results, all simulations are done for Martian conditions (of pressure and speed), even though they are used to validate tests done at different pressures and wind speeds (but with identical a dimensional aerodynamic numbers.)

9.3.3.1 Boom Local Components Comparison Simulation

Purpose and description
The aim of these simulations is to repeat tests carried out in the wind tunnel with the wind sensor (one boom) but with the EFDLab simulation program. The aerodynamic conditions (identical Reynolds and Prandtl numbers) of the wind tunnel will be reproduced in the simulation model. The local wind speed components in each transducer location will be obtained and included in a database for later analysis and comparison with identical “real” tests.

Simulated Item

Boom

Parameter and range
The range of the tests will be exactly the same as in test WS_T6,(a random selection of the tests performed will be repeated from the following tests):

- Low Speed Range:
  - Pitch: -90°, -75°, -60°, -45°, -30°, -15°, 0°, 15°, 30°, 45°, 60°, 75°, 90°. (TBC)
  - Yaw: -160°, -140°, -120°, -100°, -80°, -60°, -40°, -20°, 0°, 20°, 40°, 60°, 80°, 100°, 120°, 140°, 160°, -180°.
  - Speed (m/s)*:0, 1, 2.5, 3.75, 5, 6.25, 7.5, 8.75, 10, 11.25, 12.5, 13.75, 15, 16.25, 17.5, 18.75, 20.

  (*): Speeds 0m/s-10m/s: Tested at all pitch angles. For higher speeds, only tested in those cases in which the absolute vertical wind projection is below 10m/s.
- High Wind Speed Range:
  - Pitch: -30°, -15°, 0°, 15°, 30°. These pitch angle mesh will be used only if the resulting vertical component is less than 10 m/s.
  - Yaw: -160° to +180° with 20° intervals
  - Speed (m/s): 25, 30, 35, 40, 45, 50, 55, 60, 65, 70.

Accuracy
N/A

Environment
Simulation conditions: CO_2, 700 Pa, 298 K

Supporting Equipment
N/A

Requirements
It must be previously verified what mesh refinement level is necessary to achieve the accuracy proposed. These simulations should be finished prior to the testing in the wind tunnel (WS_T6).

Report Data Products
A database with all local component values given a certain pitch, yaw and speed configuration.

9.3.3.2 2D PCB Local Components Comparison Simulation

Purpose and description
The aim of these simulations is to repeat tests carried out in the wind tunnel with the PCB alone again but with the EFDLab simulation program. The conditions of the wind tunnel will be reproduced in the simulation model. The local wind speed components in each transducer location will be obtained and included in a database for later analysis and comparison with identical “real” tests.

Simulated Item
PCB

Parameter and range
The range of the tests will be exactly the same as in test WS_T5, again a random selection of the tests performed will be repeated from the following tests):

- Low Speed Range:
  - Pitch: -15°, 0°, 15°.
  - Yaw: -160°, -140°, -120°, -100°, -80°, -60°, -40°, -20°, 0°, 20°, 40°, 60°, 80°, 100°, 120°, 140°, 160°, -180°.
  - Speed (m/s)*:0, 1, 2.5, 3.75, 5, 6.25, 7.5, 8.75, 10, 11.25, 12.5, 13.75, 15, 16.25, 17.5, 18.75, 20.

(*): Speeds 0m/s-10m/s: Tested at all pitch angles. For higher speeds, only tested in those cases in which the absolute vertical wind projection is below 10m/s.

- High Wind Speed Range:
  - Pitch: -15°, 0°, 15°. These pitch angle mesh will be used only if the resulting vertical component is less than 10 m/s.
  - Yaw: -160° to +180° with 20° intervals
  - Speed (m/s): 25, 30, 35, 40, 45, 50, 55, 60, 65, 70.

Accuracy
N/A

Environment
Simulation conditions: CO_2, 700 Pa, 298 K

Supporting Equipment
N/A

Requirements
It must be previously verified what mesh refinement level is necessary to achieve the accuracy proposed. These simulations should be finished prior to the testing in the wind tunnel (WS_T5).

Report Data Products
A database with all local component values given a certain pitch, yaw and speed configuration.

9.3.3.3 Reduced CamMast & Boom Local Components Comparison Simulation

Purpose and description

The aim of these simulations is to repeat tests carried out in the wind tunnel with the wind sensor (2 booms and reduced CamMast) again but with the EFDLab simulation program. The conditions of the wind tunnel will be reproduced in the simulation model. The local wind speed components in each transducer location will be obtained and included in a database for later analysis and comparison with identical “real” tests.

Simulated Item
Reduced Mast with the two Booms.

Parameter and range
The range of the tests will be exactly the same as in test WS_T7 again a random selection of the tests performed will be repeated from the following tests):

- Low Wind Speed Range:
  - Yaw: -160°, -140°, -120°, -100°, -80°, -60°, -40°, -20°, 0°, 20°, 40°, 60°, 80°, 100°, 120°, 140°, 160°, -180°.
  - Speed (m/s): 0, 1, 2.5, 3.75, 5, 6.25, 7.5, 8.75, 10, 11.25, 12.5, 13.75, 15, 16.25, 17.5, 18.75, 20.
- High Wind Speed Range:
  - Yaw: -160° to +180° with 20° intervals
  - Speed (m/s): 25, 30, 35, 40, 45, 50, 55, 60, 65, 70.

Accuracy
N/A

Environment
Simulation conditions: CO_2, 700Pa, 298 K

Supporting Equipment
N/A

Requirements
It must be previously verified what mesh refinement level is necessary to achieve the accuracy proposed. These simulations should be finished prior to the testing in the wind tunnel (WS_T7).

Report Data Products
A database with all local component (2 booms, and therefore 6 transducers: 12 local components) values given a certain pitch (in this case 0°), yaw and speed configuration.

9.3.3.4 Rover & Scaled Model Comparison Simulation (TBC)

Purpose and description
The aim of these simulations is to repeat all the tests carried out in the wind tunnel with the scaled rover model but with the EFDLab simulation software, simulating Martian conditions. The conditions of the wind tunnel will be reproduced in the simulation model. The local wind speed components at several locations will be obtained and included in a database for later analysis and comparison with identical “real” tests.

Simulated Item
Rover + Mast + Two Booms

Parameter and range
The range of the tests will be that of the equivalent Reynolds number for a full dimension rover at Martian conditions:
Yaw: -120°, -80°, -40°, 0°, 40°, 80°, 120°, 160°
Speed (m/s)*: 5.1, 7.65, 10.20, 15.31, 20.41, 30.62, 40.82.
(*): Speeds calculated to obtain the same Reynolds number used in tests WS_T8.

Accuracy
N/A

Environment
Simulation conditions: CO_2, 700 Pa, 223 K

Supporting Equipment
N/A

Requirements
It must be previously verified what mesh refinement level is necessary to achieve the accuracy proposed. These simulations should be done after testing in the wind tunnel (WS_T8), as possible pressure-speed adjustments might be necessary, as a result of non controllable Earth conditions during the test (pressure, temperature and final wind tunnel speed).

Report Data Products
A database with all local components values given a certain pitch (in this case 0°), yaw and speed configuration.

9.3.3.5 Inverse Model Mesh Generation

Purpose and description
The aim of these simulations is to build the boom selection algorithm and study the effect of the rover on the wind flow. A wide database of the sensors’ readings given several possible wind directions and speeds, including the perturbations introduced by the rover and CamMast will be achieved. With these simulations it will be possible to build the necessary model for the selection of the boom as well

as help in the interpretation of the perturbation of the mast and rover on the WS. The refinement degree of the model mesh will determine the accuracy of the model.

Simulated Item
Rover + Mast + Two Booms

Parameter and range
Two set of tests will be carried out:

- Low Wind Speed Range:
  - Pitch,: -60°, , -30°, , 0°, , 30°, , 60°. These pitch angle mesh will be used only if the resulting vertical component is less than 10 m/s.
  - Yaw: -165° to +180° with 15° intervals
  - Speed (m/s): 1, 5, 10, 20.
- High Wind Speed Range:
  - Pitch: -30°*, 0°, 30°*. These pitch angle mesh will be used only if the resulting vertical component is less than 10 m/s.
  - Yaw: -160° to +180° with 20° intervals
  - Speed (m/s): 30, 50, 70.

*: only isolated random tests

Accuracy
N/A

Environment
Simulation conditions: CO_2, 700Pa, 223 K

Supporting Equipment
N/A

Requirements
It must be previously verified what mesh refinement level is necessary to achieve the accuracy proposed.

Report Data Products
A database with all local component values given a certain pitch, yaw and speed configuration.

9.3.4 Other Tests

9.3.4.1 Functional Test

Purpose and description

The aim of this test is to verify that the EMs and FMs (and spares) have similar behaviors and are working correctly. The functional test facility will be a Low Density CO_2 Discharge facility.

The wind speed will be chosen taking into account on one hand that the transducers are calibrated for use in Mars at different pressure and temperature ranges. In order to compare the response of different WS models, the testing conditions must guarantee that the sensor is working within its operating range (i.e.: no lower or upper bound saturation).

The wind transducer response varies according to the heat transferred to the ambient atmosphere, through conduction, natural convection and forced convection. The heat transferred through convection is proportional to the Nusselt number. For natural convection, the Nusselt number depends on the Rayleigh number, the product of the Grashof and Prandtl numbers, while for forced convection the dependence is on the Reynolds and Prandtl numbers. The conditions of this test will

be tuned in order that the dimensionless numbers expected in the Martian atmosphere will be approximated as close as possible considering the mechanical and thermal constraints of the apparatus.

The tests will be conducted in a low density CO_2 atmosphere, at room temperature, and at a wind speed of approximately 10m/s. The testing conditions can be reproduced and identically repeated for testing all models.

Tested Item
Boom

Parameter and range
TBD

Accuracy
Accuracy of the wind sensor in the high speed range: TBD

Environment
Ambient

Supporting Equipment
Functional Low Density CO_2 Discharge facility
Calibrated Temperature & Pressure sensors.

Requirements
TBD

Report Data Products
Every time the functional test is run a report will be produced giving the dice readings. The atmospheric pressure and the ambient temperature will figure in the title of the file with 10 readings from the wind sensor.

9.4 WIND SENSOR END -TO - END SYSTEM CHECK

The wind end to end tests will verify the capacity of the wind sensor and the ground data software to produce science data products. To obtain science data, the calibration parameters obtained in the previously described calibration tests will be used.
The tests will be carried out both in the Flight Model (FM) and the Qualification Model (QM) which are the spare models, i.e.: a total of 4 booms.
The end to end test will be done on a wind sensor mounted on a boom, using the ASIC electronics for the signal acquisition.
The end to end tests will need auxiliary data necessary for the processing: Temperature, Pressure and Nominal Wind Speed and Direction.
The end to end test is the functional test WS_IT1 described in section 9.3.4.1.

10 HUMIDITY SENSOR CALIBRATION

This section presents first a brief description of the sensor and the next section will give an overview of the calibration tests. These tests will be applied to the Humidity sensor Flight model. A detailed description of the tests is found in RD26 (tests applied to QM).
With this sort of tests, and ASIC error budget we will assure that the REMS HS meets Level 2 requirements. Requirement 014 (PLD-15), REMS shall measure the Air Relative Humidity in the range of 0 to 100% with a resolution of 1%RH and accuracy of 10% in the temperature range 203K to 323K , 015 (PLD-15), REMS shall measure directly at the ambient pressure and temperature , and 016 (PLD-20), REMS shall measure the Air Relative humidity at a minimum sampling rate of 1 Hz for at least 5 minutes each hour, at least during daylight hours, continuously over the mission.

10.1 TESTS CONDITIONS AND OVERVIEW

10.1.1 Humidity Sensor Description

The REMS HS is a miniature humidity sensor based on Vaisala Humicap® sensor head and transducer electronics. The electrical interface of REMS HS is similar to REMS PRS.

The Vaisala Humicap® sensor head is a relative humidity sensor. Its active polymer film changes capacitance as a function of relative humidity. The nominal capacitance of Humicap® is in the order of few pF, with a dynamic range of ~1pF Humicap® sensor head is temperature dependent, so it requires accurate temperature measurements from an external sensor.

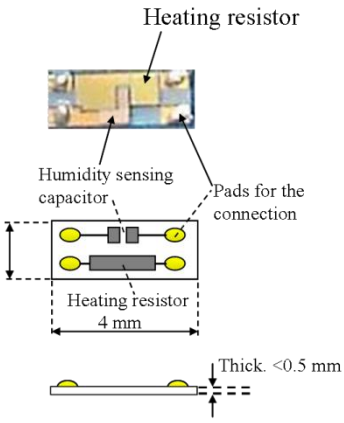

Figure 10-1 Humidity sensor head

The mechanical housing is described in Figure 10-2.

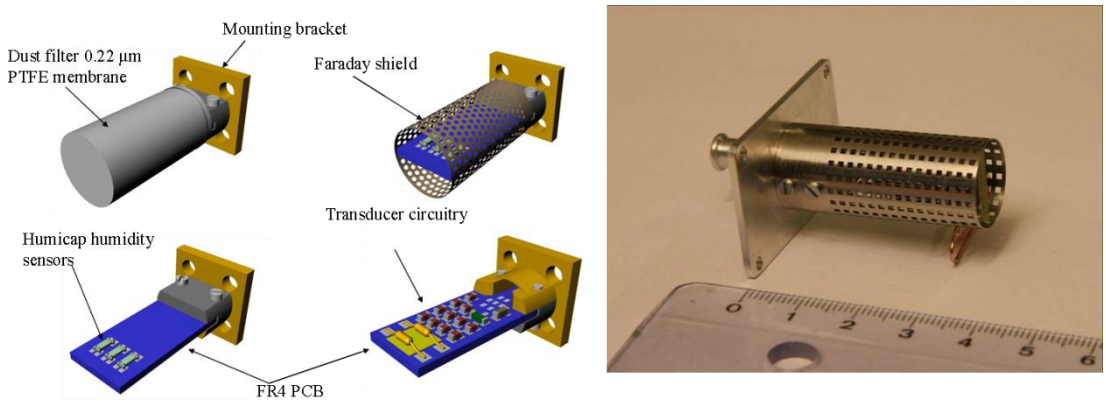

Figure 10-2 Humidity Sensor Description

And Figure 10-3 shows REMS HS Block diagram.

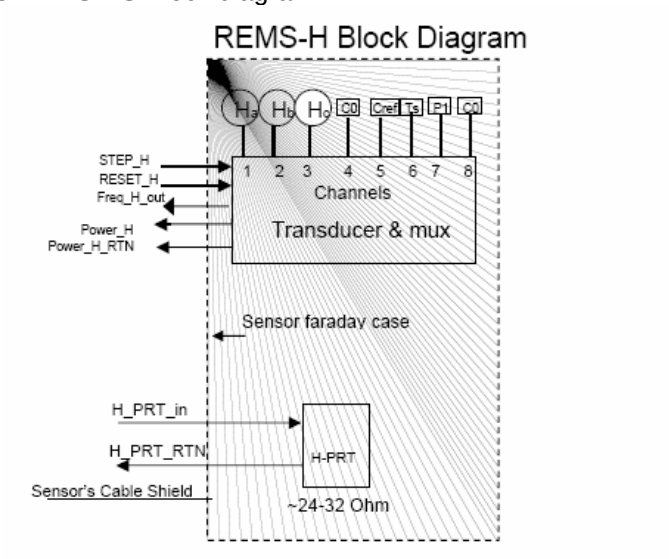

Figure 10-3 HS Block Diagram

10.1.1.1 Humidity Sensor Procedure

The HS can be maintained and calibrated by a Platinum heating resistor. It has the next three types of operation modes:

1. Maintenance
   a. Regeneration. It needs to reach +135° to 140°C temperatures on the sensor heads, to remove contaminating particles (fine gray dust, collected volatiles etc.) from the sensor. It shall be performed typically once per month during daytime when the ambient temperature is inside a predefined programmable window (for example -25°C to -15°C)
   b. Defrosting. Requires reaching +100°C temperature on the sensor heads, to remove frost in the sensor. It shall be performed every night during the Martian Winter at coldest night hours and at a temperature below the programmable threshold (in the order of -55ºC (TBC)).
2. In-Flight Calibration Procedure. It shall be calibrated at night when the temperature is so low that the humidity reaches its saturation level. Also conditions known to be very dry (in RH%) can be used for calibration/calibration checks.

10.1.1.2 In-flight Calibration during MSL Cruise Phase

During the Cruise phase, a “functional-like” test shall be performed. The unit shall be powered and all channels measured a minimum of 100 times. This will give a 0-point reference for the calibration. The last measurement should be done as close to the Mars descent phase as possible.

10.2 MAIN TEST FACILITIES

Calibration tests shall be performed in FMI’s lab (MIKES Lab as a back up to lower temperature range humidity calibration).

In all the tests, raw frequency outputs will be recorded and stored for further handling.
Measurements will be done by counting constant number of output frequency pulses.
The nominal pulse count to be used will be 400 pulses. Also the readings of reference humidity and temperature sensors will be recorded.

10.2.1 Facility Description

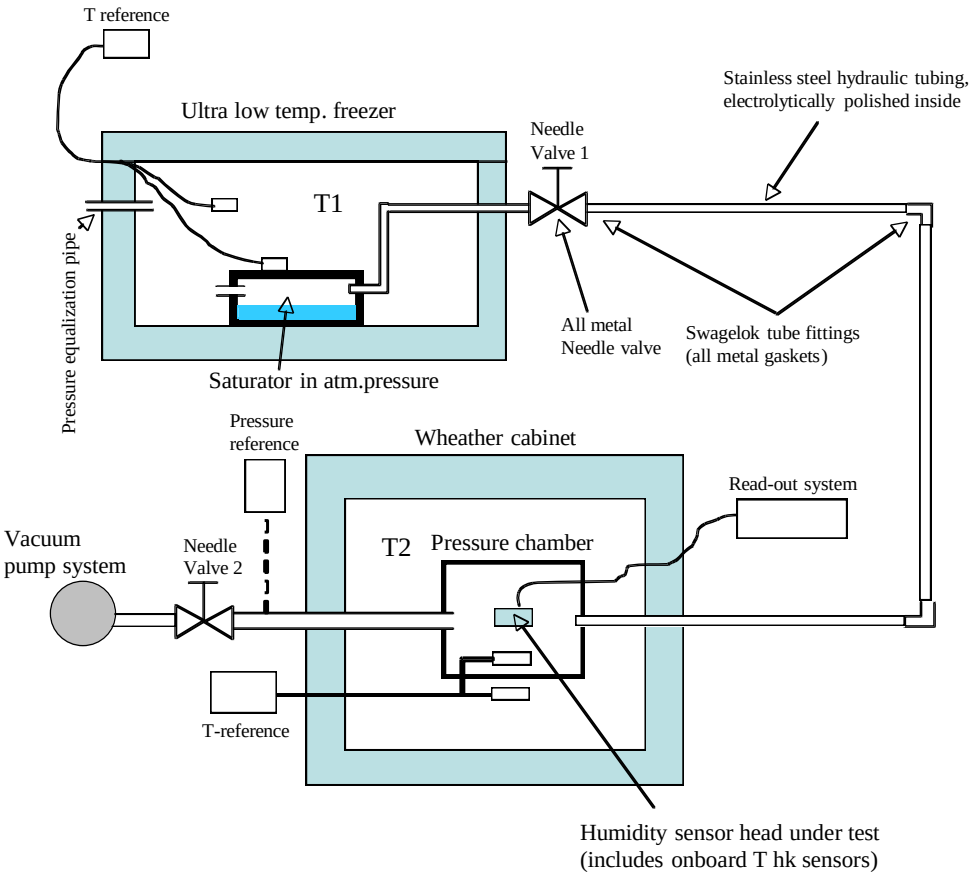

Figure 10-4 Humidity Calibration Facility in FMI (two-temperature)

10.2.2 Chamber specifications

1. RH% = f(T1, T2)
2. Vacuum baking used to clean contamination in system
3. Ultra low temperature freezer (T1) min. temp -85°C
4. Weather cabinet min. temp -70°C.

10.2.3 Instrument Measurement Chain

See RD25 for humidity sensor specification.
The HS, even through sharing the Boom enclosure is not controlled by the Boom 2 ASIC, but through three electrical interfaces REMS ICU:

1. ICU Power Supply at the Interface. Powering FPGA and Humidity sensor.
2. The FPGA Interface. This shall be the REMS software interface with the sensor. The HS shall be seen by REMS software as a digital sensor accessed through registers in its memory map. The FPGA shall be in charge of controlling low level signals.
3. The REMS ACQ Module Interface.

10.3 TEST AND PROCEDURES IN FMI

The next table is an overview of the calibration tests that are going to be performed. To See these tests in detail see RD24 and RD26 (These are calibration tests applied to QM, but they are the same that will be applied to FM).

Test ID	Test		Model	Environment	Brief Description	Order and Priority
H_1	Temperature calibration		FM	Environmentally controlled chamber	Calculate calibration coefficients of the sensor heads and measure the resistance of the resistors.	1 High
H_2	Humidity Calibration: Dry point, basic calibration, Higher temperature range, lower temperature range		FM	Environmentally controlled chamber	To verify sensor operation in the designated temperature and humidity area	2 High
H_3	Time response test		FM equivalent prototype	Environmentally controlled chamber	To measure the time constant of the humidity sensor heads	3 High
H_4	Additional Calibration Tests			Environmentally controlled chamber	To get more test and verification data to solve problems which might arise during the calibrations.	4 High

Table 10-1 HS Calibration Tests

10.3.1 Schedule

Test name	Days	Staff and roles	Date	Facility
Temperature calibration	2	TBD	19/01/2008-21/01/2008	FMI
Humidity Calibration: Dry point, basic calibration, Higher temperature range, lower temperature range	2	TBD	22/01/2008-23/01/08 29/01/2008-25/02/2008	FMI
Time response test	TBD	TBD	13/03/2008-19/03/08	FMI
Additional Calibration Tests	TBD	TBD	13/03/2008-19/03/2008	FMI
TOTAL	**TBD**			

Table 10-2 Schedule

10.3.2 Temperature Calibration

Purpose and description

The purpose of this calibration is to calculate calibration coefficients for the Thermocap® sensor heads, and to measure the resistance of Humicap® Platinum resistors in different temperatures. The test shall be done in a temperature test station. The sensor's channels shall be measured in several temperature points from the operational range.
To ensure cleanliness during temperature calibration, the sensor is closed in a clean antistatic bag in laminar flow before moving it to the test station. The bag shall have several holes (diameter 2.-3cm) protected with 5 µm filter. Alternatively a pressure vessel maybe used instead of the antistatic bag. The sensors will be closed inside the pressure vessel inside clean room under laminar flow. Pressure vessel pipe fitting will be left open with a filter for ventilation
The reference temperature shall be measured by a calibrated temperature sensor, In each temperature point the channels are measured. Data from the thermocap® channel are used for thermocap® calibration coefficients calculation: $T=b_1+b_2 \cdot R+b_3 \cdot R^2$, where R is the Humicap® H_PRT Resistance and T is temperature.

Parameter and range
Temperature points at 203K, 218K, 233K, 253K, 273K, 293K, 313K, 333K.

Accuracy
$\Delta t<0.5K$

Environment
Temperature test station

Supporting Equipment
Reference temperature sensor PT100

Requirements
The temperature must be stable in the test station ($\Delta t<1K$) before the measurements begin.
The PT100 must be calibrated against, the Humicap® transmitter HMT334 and must have a good contact with the specimen (shall be inserted in the clean bag together with the sensor).
For better temperature stability the test specimen and the PT100 sensor shall be closed in a vessel.
Calibrated temperature of H_PRT and Thermocap® differs form the reference <0.5K.

Calibration report data products
Calibration coefficients of Temperature versus Resistance : $T=b_1+b_2 \cdot R+b_3 \cdot R^2$

10.3.3 Humidity Calibration

For QM and FM the ambient temperature range shall be 203K…..298K for FM. Several humidity and temperature points shall be used for calibration. Tests shall be done in an environmentally controlled chamber (climate test station).This calibration will be performed in the FMI test lab. MIKES test lab will be secondary back up for the FMI facility.
The channels shall be measured min 5 times in each temperature/humidity point. The purpose of the test is to verify the sensor's operation in the designated temperature and humidity area. N-Point calibration will be used for calculating calibration coefficients.
This calibration will be divided in the parts:

a. 298K, 6-point calibration: 5 points basic humidity calibration + dry point.
b. 263K, …203K:5 point calibration: dry point, 25±10%RH , 50±10%RH,75±10%RH, wet point (To Be Confirmed, number of RH% points may be reduced because of the tight schedule)
c. 193K: 2-point calibration:0%,100%RH

At subzero temperatures relative humidity is expressed relative to ice.

10.3.3.1 Basic Humidity Calibration

Purpose and description
Check-outs shall be done in an environmentally controlled chamber (climate test station). Their purpose is to quickly check the sensor operation. For humidity points it will serve as a preliminary calibration of the units. The Humicap® channel data are used to calculate humidity calibration coefficients together with data from the dry point test. To ensure cleanliness during calibration the sensor is closed in a clean antistatic bag in laminar flow before moving it to the test station. The bag shall have several holes protected with a 5 um filter
Basic humidity calibration/check out is performed in the weather station in 298K. Five humidity positions are used in the order that appear below.
The process of the test consists of three steps:

a. Make sure that the measurement PC is switched off. Put the test specimen in the weather station and connect the measurement wires and the Faraday shield grounding wire (Fig 18).
b. Set the temperature and humidity in the weather station and wait until the humidity is reached and stable. Measure all channels.
c. Set the new humidity and continue until all humidity points are measured.

Parameter and range
Humidity, 10%RH, 25%RH, 50%RH, 75%RH, ~98%RH in this order
Temperature298K

Accuracy
Stability during the tests ±1% RH (test points may differ ±5% from the nominal).

Environment
Fixed Temperature

Supporting Equipment
Weather cabinet, HMT334 temeperature & humidity reference

Requirements
Humidity is stable (ΔRH <0.5%/min)
Temperature is stable (ΔT<1K/h)

Calibration report data products

Raw data from each humidity point, to be used for calibration coefficient calculation.

10.3.3.2 Dry point

Purpose and description
This test gives a dry point reference to the humidity calibration. The test specimen is closed inside a pressure vessel (in laminar flow in cleanroom), which is placed in the temperature test station and connected to the pressure control system. The stabilization time of the temperature inside of the pressure vessel when the pressure is <0.1 Pa is ~5h. For 298K, measure the channels for 100 measurement points.

Parameter and range
Pressure <0.1Pa
Temperature 298K

Accuracy
dT < 0.5K

Environment
Fixed pressure
Fixed temperature

Supporting Equipment

See RD24 and RD26.

Requirements
The temperature of the specimen must be stable.
Pressure is <0.1Pa

Calibration report data products

Raw data to be used for calibration coefficient calculation.

10.3.3.3 Higher Temperature Range Humidity Calibration

Purpose and description
Humid air streams for calibration are generated using two-temperature or two-pressure principles. The test specimen is closed inside a test pressure chamber inside a climate test station. Humidified air is generated inside a saturator located inside another climate test station. Relative humidity inside the test chamber is controlled by tuning temperatures and/or pressures of the saturator and test chamber. There is a spreadsheet based on the two temperature/two pressure principles used for calculations during the calibration. It calculates the pressure inside the pressure vessel that will result in wanted relative humidity. On the two pressure mode, the test chamber pressure is aimed to be on range 5 hPa – 30 hPa. Alternatively ambient atmospheric pressure could be used as such and run the humidity generator on two temperature modes alone.
Vacuum baking is used to clean the system from contaminating residual water vapour and for dry point reference.
The test specimen is closed inside a pressure vessel (in laminar flow in the cleanroom), which is placed in the temperature test station Weiss DU40/70 and connected to the pressure control system. The air flow for the pressure control system is taken from the saturator inside a climate station with 100%RH. The temperature inside the DU40/70 is measured with a Pt100 sensor.
The primary method will be a two-temperature method. The two-pressure & two-temperature method will be used if possible with the schedule.

The two-temperature principle test procedure:

Alternatively the system may be run in two-temperature principle alone in ambient pressure. Generating the humidity is based on temperature differences between the saturator and the test chamber.
Procedure for the two-temperature principle is:

1. Set the saturator temperature according to the spreadsheet calculation tool to achieve the required humidity point
2. Pump the vacuum inside the test chamber at room temperature and leave it stabilize for 6 h or overnight (this dries the chamber from contamination). Take measurements in vacuum a) Measure all oscillator channels for 10 times every 2.5 minutes for 30 min. b) alternatively take 5 minutes continuous measurements. The vacuum measurement will give the dry point.
3. Fill test chamber with saturator gas.
4. Calculate the required test chamber temperature using a spreadsheet calculation tool.
5. Set the test chamber temperature and let it stabilize TBC hours.
6. a) Measure all oscillator channels for 10 times every 2.5 minutes for 30 min. b) alternatively take 5 minutes continuous measurements.Saturated air temperature
7. Pump vacuum inside the test chamber, go to number 3. to repeat this test or to take measurements in a new humidity point (test chamber temperature)

The test procedure is (two pressure & two temperature principle):

8. Pump the vacuum inside the pressure vessel at room temperature and let it stabilize for 12 h or overnight.
9. Input the values in the spreadsheet.
    a. Saturated air temperature
    b. Saturated air humidity (should be ~100%RH)
    c. Measurement (test specimen) temperature
    d. Ambient pressure (measured by PTU200)
    e. Humidity to be achieved inside the vessel: 10%...50%RH.

    The spreadsheet gives the corresponding pressure of the vessel as the result. If the result is outside the window of ~20…30hPa, adjust the saturated air temperature until the pressure is inside the window. The lowest temperature of the saturator is 233K, so at very cold test temperatures the pressure must be lower than 20hPa.
10. Set the measurement temperature (DU40/07) and saturator temperature (SB11300) according to the spreadsheet. Let stabilize overnight.
11. Measure all oscillator channels. This will give the dry point.
12. Purge the pressure vessel with saturated air from the saturator according to separate instructions.
13. Adjust the temperature and ambient pressure values in the spreadsheet to match accurately current conditions. The spreadsheet recalculates the pressure in the vessel. Set the pressure in the vessel as calculated by the spreadsheet. Check the value with PTB201 Special (calibrated value). The pressure system uses filtered saturated air to rise the pressure and introduce humidity inside the vessel.
14. a) Measure all oscillator channels for 10 times every 2.5 minutes for 30 min. b) alternatively take 5 minutes continuous measurements.
15. If this was the first measurement of the day (50%), perform leakage test for 10 minutes. The leakage should be max 10 Pa/10min.
16. Pump the vacuum and let stabilize until pressure is <1Pa.
17. Recalculate pressure values for the next humidity point.
18. Return to step 7 and measure the next humidity point.
19. Repeat steps 7-11 until all humidity points until 75% are measured.
20. Return to step 2 and measure the next humidity point.
21. For the last temperature (203K), also 100%RH point is measured for reference.

Parameter and range
Frost point temperatures for calibration are 263K, 243K, 223K, 203K.

Ambient temperatures (sensor temperature) will be selected in each frost point so that relative humidity points will be: 25%, 50%, 75% nominal. Variation of humidity points ±10% RH is possible..
After dry point, the first measurement of the day is 50%, then 25% and 75%. Wet point test are done separately.
The number of humidity points may be reduced if schedule requires. Another humidity points may be used if found to be logistically or otherwise more useful or efficient during the tests.

Accuracy

dt<±0.5K, dp<±10 Pa in test chamber, 5 hPa in saturator

Environment
Environmental control chamber

Supporting Equipment
See RD24 and RD26

Requirements
Temperature must be stable inside the pressure vessel (ΔT<1K/h)
Temperature is stable inside the saturator (ΔT<1K/h)
Pressure inside the vessel is correctly set with PTB201
Leakage during test is max 10 Pa/10min

Calibration report data products

Raw data to be used for calibration coefficient calculation.

10.3.3.4 Lower Temperature Range Humidity Calibration

Purpose and description
This test shall be done in the FMI test laboratory. The purpose of the test is to verify the sensor's operation in the designated temperature and humidity range for the lowest available temperature, 193K…187K.
Two humidity points will be measured. Dry point (0%RH), and wet (100%RH over ice). The dry point has to be measured at that temperature as in section 9.2.2.2. Wet point shall be measure as follows:

a. Place a special vessel filled with water inside the weather station/low temperature freezer. Close the lid.
b. Set the temperature to subzero and wait until the water has frozen.
c. Insert the test specimen and a pt100 temperature sensor in the vessel and close the lid again.
d. Set the temperature to a selected value between193K… 187K. Wait until the temperature is stable. Relative humidity is then ~100% relative to ice.
e. Measure all oscillator channels.

Parameter and range
Ambient Temperature range shall be 188K to 293K.
2-point (dry and wet) calibration shall be performed.

Accuracy
dt<±0.5K

Environment
Temperature test station

Supporting Equipment
See RD24 and RD26.

Requirements
Temperature must be stable min 2 h <1K in test chamber prior the test

Requirements
To ensure cleanliness during calibration, the sensor is closed in a clean antistatic bag in laminar flow before moving it to the test station. The bag shall have several holes of diameter of ~2-3cm, protected with 5 µm filter.
Alternatively, the sensor is closed inside the test vessel (without antistatic bag) under laminar flow desk in clean room. The vessel will be sealed under laminar flow prior to transport to the testing facility. The vessel will be reopened after connection to the testing facility. Feed gas will be filtered.
Temperature must be stable inside the vessel (ΔT<1K/h).

Calibration report data products

Raw data to be used for calibration coefficient calculation.

10.3.4 Time Response Test

Purpose and description
The test is intended to measure the time constant of the humidity sensor heads. Tests shall be done in environmentally controlled chamber. Humidity conditions shall be varied stepwise in the chamber. The humidity sensor heads shall be measured and monitored continuously during the humidity changes.

Parameter and range
Humidity change min delta 30 % RH in test chamber created in 30 s

Accuracy
Humidity output of the test device recorded in 10 s accuracy (time constant will be in lowest temperatures order of hundred to thousand seconds).

Environment
See RD24 and RD26

Supporting Equipment
See RD24 and RD26

Requirements
The temperature must be stable min 1 h <1K in the test chamber prior the test.

Calibration report data products

10.3.5 Additional Calibration Tests

Additional calibration tests may be done to get more test and verification data and to solve problems which might arise during the calibrations.
Additional tests may include humidity and temperature sweeps and modified calibration and check out tests.
These tests may be performed in external facilities.

10.4 HUMIDITY SENSOR END - TO - END SYSTEM TESTING

The HS is part of the Boom2 and once integrated several functional tests will be performed, at boom and instrument level. Those tests will record the laboratory ambient relative humidity and check against the laboratory reference measurements.

11 PRESSURE SENSOR CALIBRATION

A brief description of the REMS PRS will be given in the first section. In the second part the main calibration facilities will be described and in the third part, the tests will be presented as a fundamental action to make REMS meet L2 Requirements. With this sort of tests, we will ensure that the REMS PRS meets Level 2 requirements. Requirement 010 (PLD-14), REMS shall measure the Ambient Pressure in the range of 1 to 1150Pa with a resolution of 0.5 Pa and accuracy of 10 Pa BOL and 20 Pa EOL. Requirement 012 (PLD-20), REMS shall measure the Ambient Pressure at a minimum sampling rate of 1 Hz for at least 5 minutes each hour continuously over the mission.

11.1 TESTS CONDITIONS AND OVERVIEW

11.1.1 Pressure Sensor Description

The REMS PRS is a miniature pressure sensor based on the Vaisala Barocap® sensor head and transducer electronics. The measurements are controlled by a Vaisala proprietary ASIC. The technology of the Barocap® is well known and it has previously flown in several missions such as Phoenix Pressure Sensor which is similar to the REMS PRS and was launched in August 2007.

The PRS head is a capacity sensor. Pressure moves the capacitor plates in the sensor. PRS contains LL and RSP2M type Barocap sensor heads specifically manufactured for FMI for space applications. The nominal capacitances and resolutions of the different Barocap types are the following:
- LL: Nominal capacitance 10 Pf, resolution 0.2 Pa
- RSP2M: Nominal capacitance 13 Pf, resolution 0.2 Pa

The LL Barocap has been used in several space missions. Its log-term stability including the effects of environmental stresses is <10 Pa. The RSP2M Barocap is less stable but has a shorter war-up time. The REMS PRS has two transducers controlled by separate ASICs. 2 pressure sensor heads are associated to each transducer. Also two Thermocap® temperature sensors are associated to each transducer for temperature compensation.

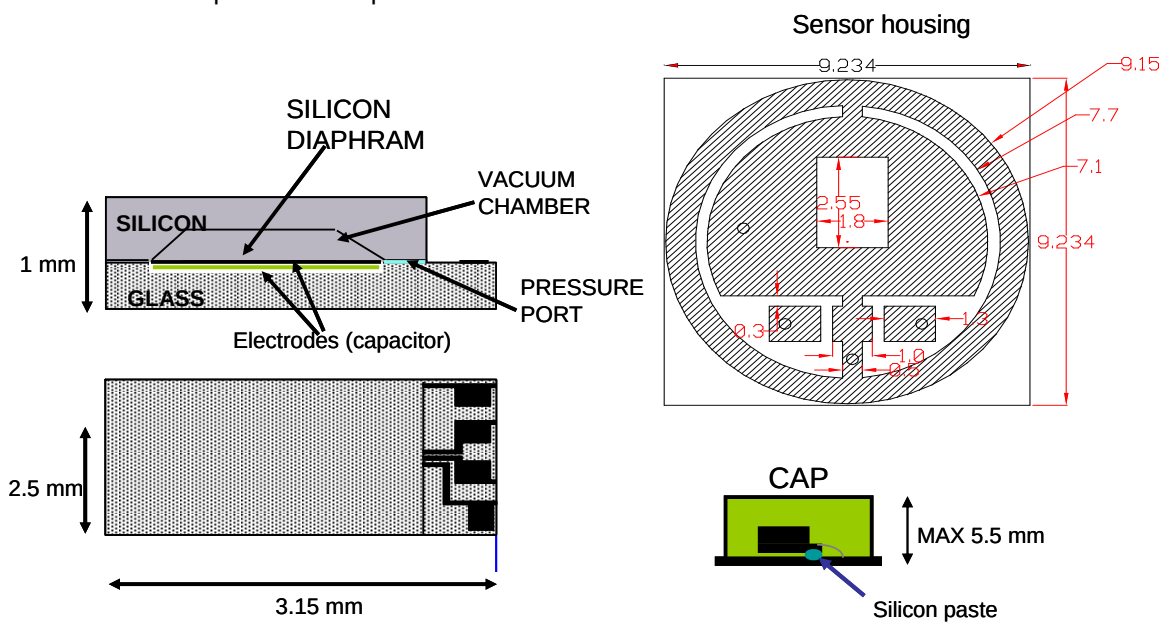

Figure 11-1 Left, PRS head, right, PRS housing

The PRS is situated at the bottom of the ICU in the bottom part, connected to the atmosphere by a snorkel, as shown in and

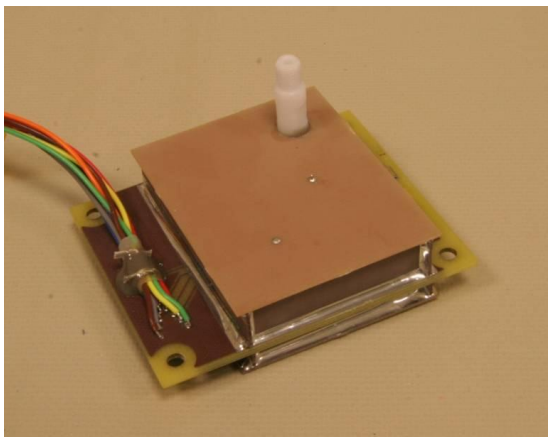

Figure 11-2 QM1 PRS, with the snorkel

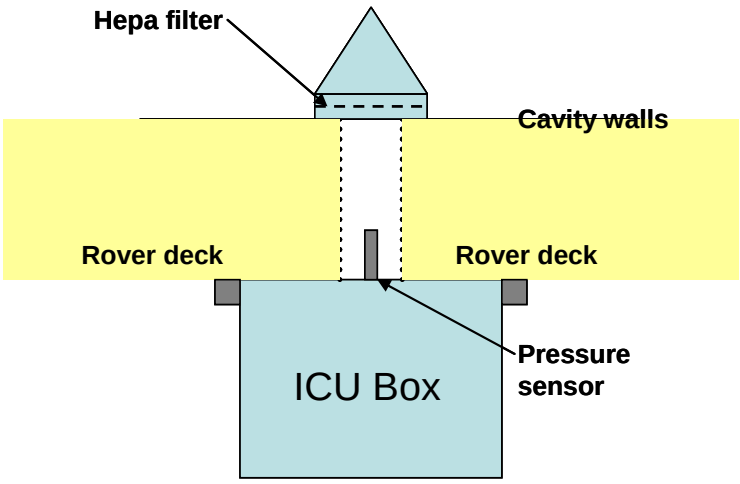

Figure 11-3 Drawing of the PRS inserted in the rover deck with the snorkel

shows the block diagram of REMS PRS.

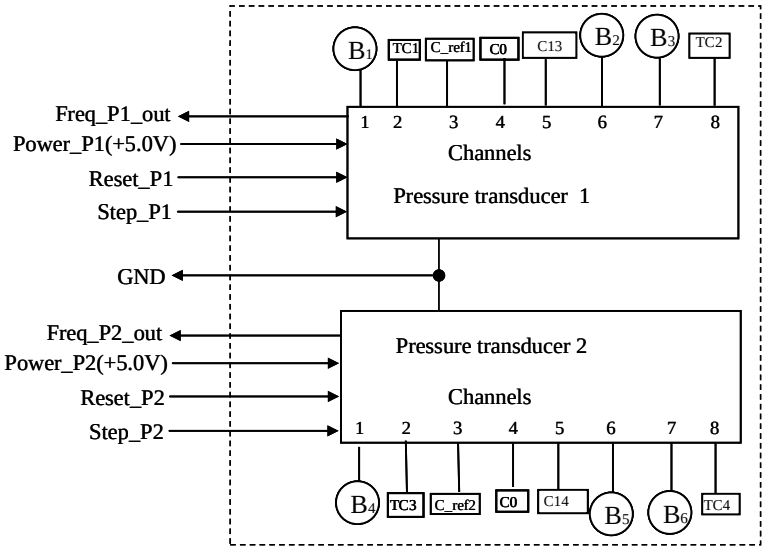

Figure 11-4 PRS Block Diagram

11.1.1.1 Calibration during MSL Cruise phase

During the Cruise Phase, “functional-like” tests shall be performed. The unit shall be powered and all channels of both transducers shall be measured a minimum of 100 times. This will give a 0-point reference for the calibration. The last measurement should be done as close to the Mars descent phase as possible.

11.2 MAIN TEST FACILITIES

The PRS is first going to be calibrated in the FMI calibration laboratory. After these tests the PRS will be delivered to CRISA where Calibration checks will be performed with the pressure sensor integrated with a snorkel. Another check should be developed with the snorkel inserted in the rover deck cavity to characterize the response to a sudden pressure change.
In all the tests, raw frequency or pulse count outputs shall be recorded and stored for further handling. Measurements shall be done using a method of counting constant number of output frequency pulses. The nominal pulse count to be used with 8 channels will be 350 pulses. Also the readings of reference pressure and temperature sensors shall be recorded.
Pressure calibration will be done against transfer references, which in turn are calibrated against a national standard reference sensor.

In all pressure tests, the test setup must be built so that during the measurements there is no flow through the hose connecting the pressure transfer reference to the test chamber

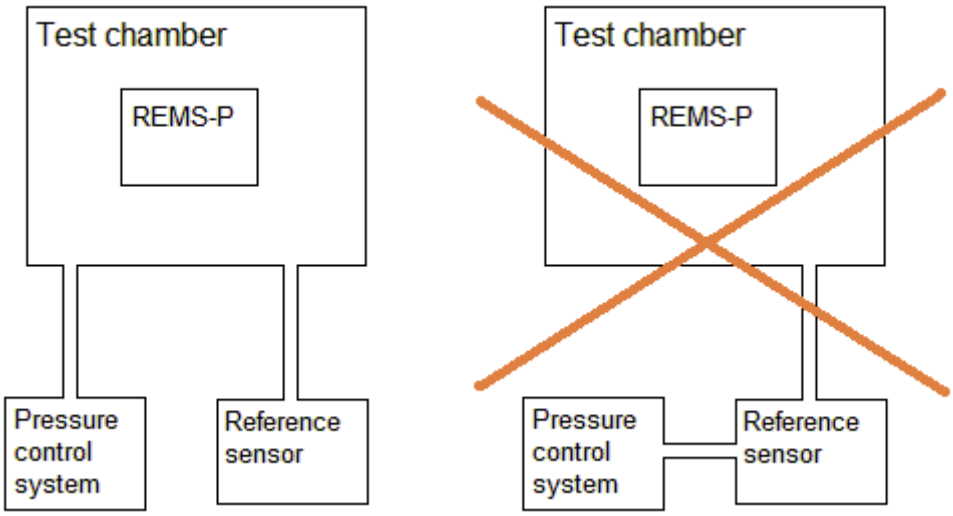

Figure 11-5 PRS Test Set-Up

11.2.1 Facility Description

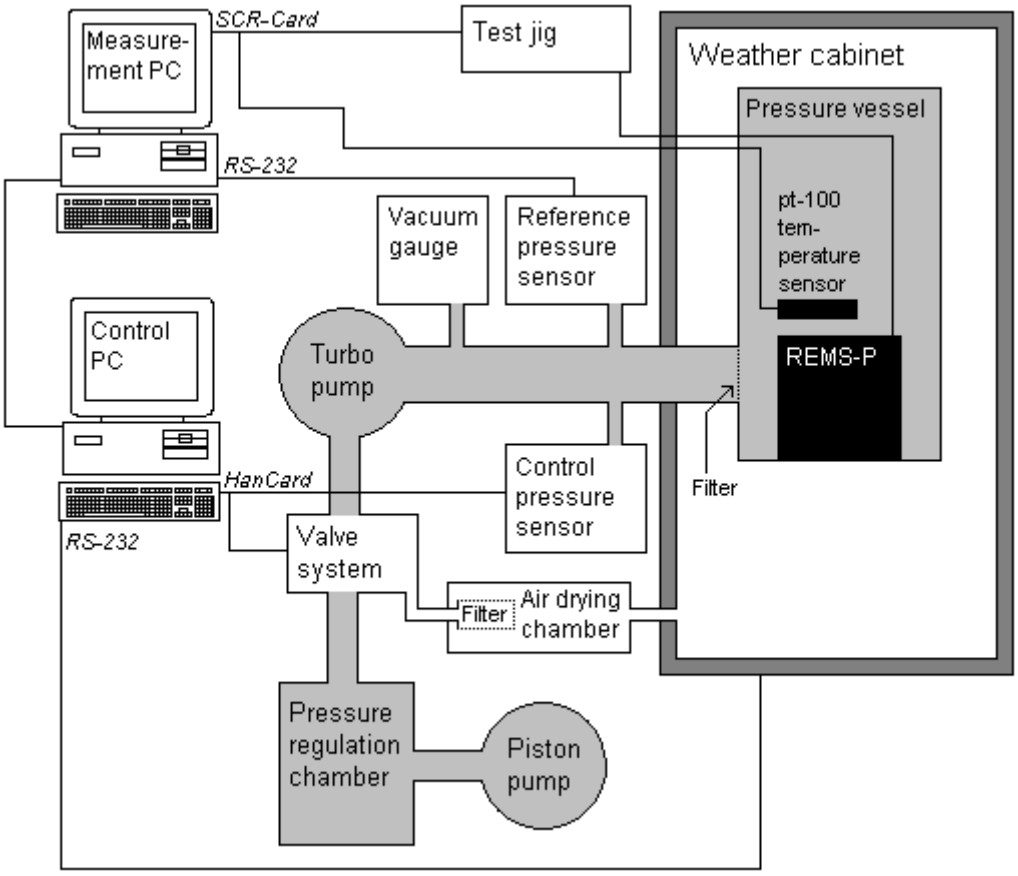

Figure 11-6 Pressure Calibration Facility in FMI

11.2.2 Chamber specifications

5. Pressure range: $5*10^{-3}$ Pa to atmospheric ambient pressure
6. Temperature range: 203K to 403K
7. Carrier gas: dried and filtered air. When pressure inside the pressure vessel is raised then the supplement air is taken from inside the weather cabinet and then dried and filtered to avoid condensation and contamination
8. The test specimen is closed inside the pressure vessel in a cleanroom. The inlet of the pressure vessel is secured with a hepa-filter for dust protection. Cleanliness inside the pressure vessel class shall be 100 000

11.2.3 Instrument requirements

1. The Pt100 sensor used in the Temperature calibration test shall meet the following:
    a. Measurement range 218K to 343K
    b. Accuracy < 0.5K
2. The pressure transfer reference sensor used in the calibration and check out tests shall meet the following:
    a. Accuracy in the pressure range 1Pa to 1150 Pa less than 1.5 Pa
    b. Stability in the pressure range 1Pa to 1150 Pa better than 2 Pa /year
    c. Calibrated against a national standard reference maximum 60 days before or after the start of the FM calibration tests. For QM and EM tests the transfer reference sensor should be calibrated against a national reference maximum 1 year before the beginning of the calibration tests.

FMI can support CAB/CRISA by lending a pressure reference sensor that fulfills these criteria for the higher assembly level tests.

11.2.4 Measurement Chain

All the details about the PRS electronics are found in RD27.
The PRS is controlled through two electrical interfaces by the REMS ICU:

1. The ICU Power Supply Interface. Powering FPGA and Pressure sensor.
2. The FPGA Interface. This shall be REMS software interface with the sensor. The pressure sensor shall be seen by REMS software as a digital sensor accessed through registers in its memory map. The FPGA shall be in charge of controlling low level signals.

11.3 TESTS AND PROCEDURES

Calibration tests will be done for Flight and Qualification models. The engineering model will have a shorter calibration explained in RD19.

NOTE: The original Flight Model was replaced with Qualification Model 2 in 2009. The test schedule below holds for Qualification Model 2. The tests were performed on qualification levels.

11.3.1 Tests performed in FMI

The tests are detailed in RD23.

Test ID	Test	Environment	Model	Brief Description	Order and Priority
PR_1	Temperature	FMI pressure test facility	FM	Calculate the calibration coefficients for the Thermocap	1 HIGH

	Calibration			sensor heads. The test may be combined with a pressure test for schedule reasons	
PR_2	Calibration 1 (sensor level)	FMI pressure test facility	FM	Verify the sensor's operation in the designated temperature and pressure area and calculate calibration coefficients. This test also checks noisiness (resolution) and verifies that the sensor units are vacuum-proof. This first calibration test is performed before all environmental tests. It is intended for calculating initial calibration coefficients used during the test campaign.	2 HIGH
PR_3	Check Out tests (sensor level)	FMI pressure test facility	FM	Check sensor's operation between the environmental tests and measure the impact of environmental stresses on calibration. The data of all Check out, Calibration and higher assembly level tests are used together to determine the long term stability of the sensor.	3 HIGH
PR_5	Calibration 2 (sensor level)	FMI pressure test facility	FM	As calibration 1. This second calibration test is after all instrument level environmental tests. It is intended for calculating final calibration coefficients.	5 HIGH
PR_6	Time Response test	FMI pressure test facility	FM	Check the time constant of the sensor	6 HIGH
PR_7	Random check data measurement	FMI pressure test facility	FM	Check the calibration of the sensor. The actual pressure values of all pressure sensor heads and the quick pressure estimate calculated by the FPGA are checked in this test. This is also an end-to-end test for the flight software. The resolution when using the high resolution mode is determined in this test.	7 HIGH
PR_8	Power consumption and input voltage test	FMI pressure test facility	FM	The dependence on input voltage of the pressure readings of all Barocap channels and the power consumption of the sensor are measured	8 HIGH
PR_9	High Pressure Calibration	FMI pressure test facility	FM	Calibration of the device roughly to ambient atmospheric pressure for pre-launch housekeeping tests.	9 HIGH
PR_10	Temperature response test	FMI pressure test facility	FM	Perform measurements in changing temperature to determine values of correction parameters.	TBD LOW
PR_11	Additional calibration tests	FMI pressure test facility	FM	To get more test and verification data and problems which might arise during calibrations	TBD LOW

Table 11-1 PRS Calibration Tests

11.3.1.1 Schedule

NOTE1: Check Out tests (PR_3) are not mentioned in the table below. Check Out tests were performed before and after all environmental tests. All together 11 Check Out tests were performed during the test campaign.

NOTE2: The "Calibration 2" -test was repeated 3 times.

Test ID	Test	Days	Staff and Roles	Date	Test Place and Facility
Test session A: The original calibration tests and acceptance level environmental tests performed by FMI in January - February 2008					
PR_2	Calibration 1 (sensor level)		TBD	28/12/2007 - 2/1/2008	FMI
PR_5a	Calibration 2 (sensor level)		TBD	1/2/2008 - 11/2/2008	FMI
PR_8	Power consumption and input voltage test		TBD	1/2/2008 - 5/2/2008	FMI
PR_7	Random check data measurement		TBD	6/2/2008 - 10/2/2008	FMI
PR_6	Time Response test		TBD	8/2/2008 - 10/2/2008	FMI
Test session B: Qualification level environmental tests performed by FMI in March - July 2008					
PR_5b	Calibration 2 (sensor level)			24/4/2008 - 1/5/2008	FMI
Test session C: Environmental tests performed by CRISA in April 2009					
Test session D: Delta testing after the repair in April/May 2009					
PR_9	High Pressure Calibration		TBD	12/5/2009 - 13/5/2009	FMI
PR_10	Temperature response test		TBD	20/5/2009 - 21/5/2009	FMI
PR_5c and RP_1	Calibration 2 (sensor level), combined with Temperature Calibration		TBD	22/5/2009 - 26/5/2009	FMI
	TOTAL	**TBD HRS**			

Table 11-2 Schedule

11.3.1.2 Temperature calibration

Purpose and description

The purpose of the Temperature calibration is to calculate the calibration coefficients for the Thermocap® sensor heads. The tests shall be done in a temperature test station. All the channels of both transducers shall be measured in several temperature points form the operational temperature range.

The temperature stabilization time for each point is min. 2.5 hours. The temperature has to be stable in the test station (ΔT<1°C/h) before the measurements begin. In each point, both transducers are measured for 1 minute. The test may be combined with a pressure test for schedule reasons.

Parameter and range
Temperature points:
QM: Range from -55°C to +70°C, intervals maximum 20 °C.
FM: Range from -45°C to +55°C, intervals maximum 20 °C

At least the temperature points +55°C, +25°C, -5°C and –45°C shall be measured twice so that other temperatures have been measured between the measurements to check repeatability.

Accuracy
2 °C

Environment
Atmospheric pressure or Martian pressure (400 to 1200 Pa)

Supporting Equipment
pt-100 sensor
See RD24 and RD26.

Requirements
Temperature must be stable (ΔT<1°C/h) during measurements

Calibration report data products

1. Calibration equation and coefficients for each Thermocap® sensor head
2. A graph showing the capacitance of Thermocap® against reference temperature for each Thermocap® sensor head.

11.3.1.3 Calibration (sensor level)

Purpose and description
Calibration shall be done in an environmentally controlled chamber (climate tests station). The frequencies of all channels of both transducers shall be measured at several temperature points within the operational temperature range and pressure points from the operational pressure range including vacuum (< 0.1 Pa). Both transducers shall be measured for 1 minute at each temperature/pressure point. In every temperature also a sweep measurement shall be performed for both transducers. In a sweep measurement pressure changes slowly (0.2 hPa / min) from 13 hPa to 3.5 hPa and one transducer is measured continuously during this pressure change. During temperature changes both transducers shall be measured during a maximum 3-minute interval,

The purpose of the test is to verify the sensor's operation in the designated temperature and pressure area and to calculate calibration coefficients. This test also checks for noisiness (resolution) and verifies that the sensor units are vacuum-proof. The measurements performed during temperature changes are used to check the impact of changing temperature on the sensor accuracy.

Parameter and range
Temperature points:
QM: Range from 218K to 343K, intervals maximum 15K.
FM: Range from 228K to 328K, intervals maximum 15 K.

Pressure points in each temperature:
Range from 0(< 50 Pa) to 1400 Pa, intervals maximum 200 Pa.
In the temperature +25K a measurement is performed also in high vacuum (< 0.1 Pa).

All temperature/pressure points shall be measured at least twice

Accuracy
Temperature: 2K
Pressure: 50 Pa

Environment
Martian pressure 0(<50Pa)to 1400 Pa. See 'Parameter and Range' and 'Requirements' for details.

Supporting Equipment
Pressure transfer reference sensor
See RD24 and RD26.

Requirements
1. The pressure sensor shall be kept in pressure <50 Pa for minimum 1 h before the test starts for outgassing purposes.
2. The pressure shall be kept at constant Martian pressure (about 8 hPa) during temperature changes.
3. Temperature must be stable (ΔT<1K/h) during measurements
4. Pressure must be stable (ΔP < 2Pa/min) during measurements

Calibration report data products
1. Calibration equation and coefficients for each barocap sensor head
2. Resolution when using low-resolution mode for each barocap sensor head
3. For each barocap sensor head a graph showing the difference between the calibrated pressure of barocap and reference against reference pressure.
4. For each barocap sensor head a graph showing the capacitance of barocap against reference pressure in sweep measurements.
5. A and B parameters for calculating the quick pressure estimate for all Barocap pressure sensor heads.

11.3.1.4 High pressure Calibration

Purpose and description
The purpose of this test is to calibrate the device roughly to ambient atmospheric pressure for pre-launch housekeeping tests. High pressure calibration test procedure is the same as the calibration test, but with other temperature/pressure points.

Parameter and range
Temperature points:
283K, 298K and +313K
Pressure points at each temperature:
Range from 0(< 50 Pa) to ambient atmospheric pressure, intervals maximum 200 hPa.

Accuracy
Temperature: 2K
Pressure: 10 hPa

Environment
See 'Parameter and Range' and 'Requirements'

Supporting Equipment
Pressure transfer reference sensor
See RD24 and RD26.

Requirements

1. Temperature must be stable (ΔT<1K/h) during measurements
2. Pressure must be stable (ΔP < 2Pa/min) during measurements

Calibration report data products

1. Calibration equation and coefficients for each barocap sensor head
2. For each barocap sensor head a graph showing the capacitance of the barocap against reference pressure.

11.3.1.5 Random check data measurement

Purpose and description

The purpose of this test is to collect data to validate the calibration of the sensors. This is also an end-to-end test for the flight software. The actual pressure values of all pressure sensor heads and the quick pressure estimate calculated by the FPGA are checked in this test. The resolution when using the high resolution mode is determined in this test. Several temperature points from the operational temperature range and pressure points from the operational pressure range will be chosen randomly for this test. Both transducers of the sensor are read in these temperature/pressure points using the FMI driver (EGSE). Measurements shall be done in both the High Resolution Sampling and Nominal modes.

Parameter and range

Temperature points:
Minimum at 2 temperatures chosen randomly from the operational temperature range

Pressure points in each temperature:
Minimum 5 pressure points chosen randomly from the operational pressure range. The pressure points are chosen separately for each temperature.

Accuracy

Temperature: 2K
Pressure: 50 Pa

Environment

Martian pressure 400 to 1400 Pa. See ‘Parameter and Range’ and ‘Requirements’ for details.

Supporting Equipment

Pressure transfer reference sensor
See RD24 and RD26.

Requirements

1. The pressure sensor shall be kept in pressure <50 Pa for minimum 1 h before the test starts for outgassing purposes.
2. The pressure shall be kept in the Martian pressure range (<1150 Pa) during temperature changes.
3. Temperature must be stable (ΔT<1K/h) during measurements
4. Pressure must be stable (ΔP < 2Pa/min) during measurements

Calibration report data products

1. Resolution for each barocap sensor head when using the high resolution mode.
2. A table showing calibrated pressure of each barocap sensor head and reference pressure in all measurement points.
3. A graph showing the difference between the quick pressure estimate and reference pressure against reference pressure.

11.3.1.6 Check Out tests (sensor level)

Purpose and description
Check out tests shall be done in environmentally controlled chamber (climate test station). The check out test is basically like the Calibration test, but with fewer temperature and pressure points. Its purpose is to check the sensor's operation in Martian conditions between environmental tests. The data of Check out, Calibration and higher assembly level tests is together used determine the long term stability of the sensor.

Parameter and range
Temperature points:
328K, 298K, 268K and 228K

The following pressure points should be measured at each temperature: 400, 800 and 1200 Pa. In the temperature 298K a measurement is performed also in high vacuum (< 0.1 Pa).

Accuracy
Temperature: 2K
Pressure: 50 Pa

Environment
Martian pressure 0 to 1400 Pa. See 'Parameter and Range' and 'Requirements' for details.

Supporting Equipment
Pressure transfer reference sensor
See RD24 and RD26

Requirements
1. The pressure sensor shall be kept at pressure <50 Pa for at least 1 h before the test starts for outgassing purposes.
2. The pressure shall be kept in the Martian pressure range (<1150 Pa) during temperature changes.
3. Temperature must be stable (ΔT<1K/h) during measurements
4. Pressure must be stable (ΔP < 2Pa/min) during measurements

Calibration report data products
1. Long term stabilities for each barocap sensor head.
2. The data measured in the Check out at all temperature/pressure points selected, Calibration and higher assembly level tests shall be plotted in the same graph. In this graph the difference between the calibrated pressure of barocap and reference will be plotted against test number or time. A separate graph will be plotted for all Check Out temperature/pressure points.
3. Estimates of the impacts of environmental stresses on calibration.

11.3.1.7 Time Response Test

Purpose and description
The purpose of the time response test is to measure the time constant of the sensor. The test will be performed in Martian Pressure with a sudden pressure change of ~10 Pa. One Barocap channel shall measure continuously during, before and after the pressure change. The test shall be performed both using the measurement computer of the FMI lab and the REMS EGSE.

Parameter and range
Magnitude of pressure change: 4 to 20 Pa.
Time of pressure change: < 2 s.

Accuracy

N/A

Environment
Martian Pressure (4-12hPa)
Temperature inside the operational temperature range 228K to 328K.
See RD24 and RD26.

Supporting Equipment
Pressure transfer reference sensor with time constant < 0.5 s

Requirements
1. The measurement shall begin at least 1 minute before the pressure change
2. The measurement shall end at least 1 minute after the pressure change
3. The sampling rate shall be
   - 3 samples/s when using the measurement computer of the FMI lab or faster.
   - 1 sample/s when using the REMS EGSE.
4. When using the REMS EGSE high resolution the sampling mode shall be used.

Calibration report data products
1. Time constant.
2. A graph showing the calibrated pressure of barocap and reference sensors versus time, plotted using data measured with the measurement computer of the FMI lab.
3. A graph showing the quick pressure estimate versus time, plotted using data measured with REMS EGSE.

11.3.1.8 Power consumption and input voltage test

Purpose and description
The purpose is to measure how the pressure readings and the power consumption of the sensor depends on input voltage. The test shall be combined with a check out or calibration test.

Parameter and range
Input voltage levels: 4.9, 5 and 5.1 V

Accuracy
0.01 V

Environment
Pressure: 800 Pa
Temperature inside the operational temperature range 228K to 328K

Supporting Equipment
Pressure transfer reference sensor
Laboratory power source
2 digital multimeters (calibrated with 0.01 V accuracy)

Requirements
1. Temperature must be stable ($\Delta T<1K/h$) during measurements
2. Pressure must be stable ($\Delta P < 2Pa/min$) during measurements

Calibration report data products
1. The power consumption for both oscillators
2. The dependence of the pressure reading input voltage for all Barocap sensor heads

11.3.1.9 Temperature response test

Purpose and description

The purpose of the temperature response test is to perform measurements in changing temperature to determine values of correction parameters. The test will be performed at constant Mars-like pressure and temperatures slowly changing over the whole operational temperature range. Both transducers shall be measured at a maximum 3 minute interval during the whole test. This test is not mandatory since the effect of changing the temperature is measured also in the Calibration test.

Parameter and range
Constant Martian pressure (about 8 hPa) and temperature slowly changing (10°C/h to 20°C/h) over the whole operational temperature range (328K to 228K)

Accuracy
The pressure is allowed to vary -+ 1 hPa during the test.

Environment
See 'Parameter and range'

Supporting Equipment
Pressure transfer reference sensor

Requirements
The pressure sensor shall be kept at a pressure <50 Pa for at least 1 h before test start for outgassing purposes.

Calibration report data products
Correction parameters for compensating the impact of changing temperature on the readings of each barocap sensor head.

11.3.1.10 Additional calibration Tests

Additional calibration tests may be run to get more test and verification data and to solve problems which might arise during calibrations.
Additional tests may include pressure and temperature sweeps.

11.3.2 Tests performed in CAB/CRISA/JPL

The following tests are detailed in RD29 and are going to be performed in CAB/CRISA/JPL.

FMI can support these tests by sending equipment and personnel. Copies of all raw data files measured during these tests shall be sent to FMI. A test report shall be prepared by FMI personnel based on the data from these higher assembly level tests.

Test ID	Test	Model	Environment	Brief Description	Order And Priority
PR_12	Calibration Check 1 (higher assembly level)	QM2	CRISA vacuum chamber	Check sensor's operation and get more data for determining the long term stability of the sensor This first higher assembly level calibration check is performed at ICU level before the Thermal Vacuum test	1 (HIGH)

PR_13	Variation of the PRS time response with mechanical constraints: Cavity	EM1	CAB Mars simulation chamber	Check calibration data after sudden pressure change inside the cavity	2 (HIGH)
PR_14	Variation of the PRS time response with mechanical constraints: Dust	EM1/ EM2	CAB Mars simulation chamber	Calibration check of the effect of the accumulated dust on the HEPA filter	3 (HIGH)
PR_15	Calibration Check 2 (higher assembly level) TBC	QM2	CRISA vacuum chamber	Check sensor's operation after the Thermal vacuum test.	4 (LOW)
PR_16	Calibration Check during MSL-level System Thermal Test	QM2	JPL test faculties	Check sensor's operation after integration to the rover and determine the short-term repeatability's and warm-up times of the Barocap sensor heads. ATLO	4 (LOW)

Table 11-3 PRS Calibration Tests

11.3.2.1 Schedule

Test name	Days	Staff and roles	Date	Facility
Variation of the PRS time response with mechanical constraints: Cavity	TBD	CRISA test team /CAB test team	14/07/2008 - 15/07/2008	CAB Mars simulation chamber
Calibration Check 1 (higher assembly level)	TBD	CRISA test team /CAB test team	24/10/2009	CRISA vacuum chamber
Calibration Check 2 (higher assembly level) TBC	TBD	CRISA test team /CAB test team	28/10/2009	CRISA vacuum chamber
Calibration Check during MSL-level System Thermal Test	TBD	TBD	9/3/2011 – 27/3/2011	JPL test faculties
Variation of the PRS time response with mechanical constraints: Dust	TBD	CRISA test team /CAB test team	TBD	CAB Mars simulation chamber

Table 11-4 Schedule

11.3.2.2 Calibration Check (higher assembly level)

Purpose and description

The higher assembly level calibration check tests will be performed in the Mars Environmental Chamber described in 8.5.3 or CRISA vacuum chamber. The tests shall be performed after the integration in CRISA of the pressure sensor with the ICU and the snorkel.

For QM2 Calibration Checks should be performed before and after the ICU-level Thermal Vacuum test in CRISA. One of the higher assembly level Calibration Check tests may be combined with the Mars ambient pressure test.

Raw outputs of all channels from both transducers shall be measured with the ICU in several temperature points from the operational temperature range and pressure points from the operational pressure range including vacuum (< 0.1 Pa). All channels from both transducers shall be measured

for min. 1 minute in each temperature/pressure point. Also the reading of a pressure reference sensor shall be recorded. FMI will borrow a reference for CAB/CRISA for this purpose. The purpose of the test is to check sensor's operation and get more data for determining the long term stability of the sensor.

Parameter and range
Temperature points:
328K, 298K, 268K and 228K.

Pressure points in each temperature:
400, 800 and 1200 Pa
In the temperature 298K a measurement is performed also in high vacuum (< 0.1 Pa). If the test must be shortened for schedule reasons then it can be performed at just one pressure point. In this case it is recommended to perform the test in vacuum.

Accuracy
The pressure shall be set with the accuracy 50 Pa and measured with the best accuracy of the reference pressure sensor.

Environment
Martian pressure 0 to 1400 Pa. See 'Parameter and Range' and 'Requirements' for details.

Supporting Equipment
A reference pressure sensor that meets the requirements mentioned in 0. FMI can loan a reference sensor to CAB/CRISA for this purpose.

Requirements
1. The pressure sensor shall be kept at low pressure (<50 Pa) for a minimum of 2 h before the first measurement for outgassing purposes.
2. The pressure shall be kept in the Martian pressure range (<1150 Pa) during temperature changes.
3. Temperature measured with the Thempcap sensor heads of REMS-P must be stable ($\Delta T<1K/h$) during measurements
4. Pressure must be stable ($\Delta P < 2Pa/min$) during measurements

Calibration report data products
1. Long term stabilities for each barocap sensor heads.
2. The data measured in the Check Out temperature/pressure points in all Check out, Calibration and higher assembly level tests shall be plotted in the same graph. In this graph the difference between the calibrated pressure of barocap and reference is plotted against number of test or time. A separate graph will be plotted for all check out temperature/pressure points.

11.3.2.3 Variation of the PRS time response with mechanical constraints

Purpose and description
The purpose of this test is to measure the time response of the PRS when it is inserted in the cavity of the rover deck during operation.
The test will be performed in the Mars Simulation Chamber at CAB, see 8.5.3. The two sub-chambers will have different pressures and by opening the valve between them a sudden pressure change will be generated.
The test will be performed at Martian Pressure with a sudden pressure change of ~10Pa. One barocap channel shall be measured continuously during and after the pressure change.
This test is going to be performed on the EM PRS, inserted in the ICU.

For simulating the cavity where the PRS is inserted, a mechanical structure has been constructed at CAB. shows the four towers that support the ICU and the rover deck walls simulation with the snorkel. The cavity has a diameter of 36,2 mm and a length of 80,1mm.

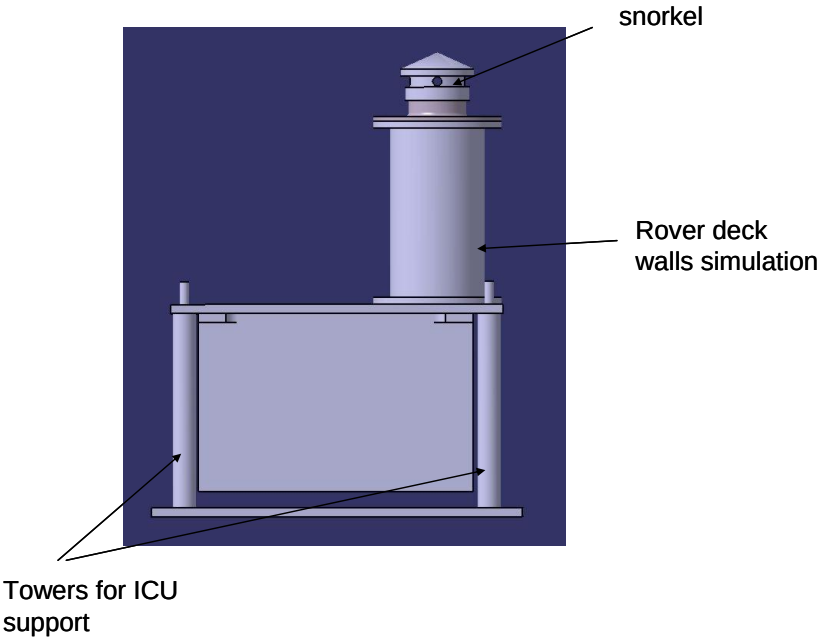

Figure 11-7 Mechanical structure for the ICU support and rover deck walls with snorkel.

This is the test sequence:

.1 Measure a sudden Pressure change inside the chamber with a reference chamber pressure sensor (See 0).
.2 Measure a sudden Pressure change inside the chamber with the EM PRS without cavity made up.
.3 Measure a sudden Pressure change inside the chamber with the EM PRS inserted in the cavity as shown in .
.4 Measure a sudden Pressure change inside the chamber with the EM PRS inserted in the cavity as shown in and Mars equivalent dust added on the HEPA filter.

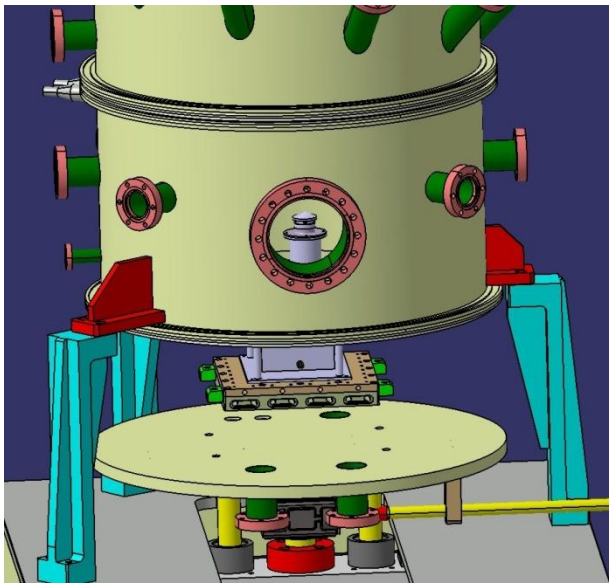

Figure 11-8 EM PRS and EM ICU in the mechanical structure inserted in the Mars Environmental simulation chamber

Parameter and range
Sudden Pressure change of 10Pa
Temperature TBD

Accuracy
The pressure shall be set with an accuracy of 50 Pa and measured with the best accuracy of the reference pressure sensor.
Accuracy of Temperature in the chamber TBD

Environment
Air
Martian Pressure,4-12hPa
Temperature inside the operational Temperature range -45°C to +55°C

Supporting Equipment
Mechanical structure
Pressure reference sensor
ICU and PRS data acquisition system provided by CRISA.

Requirements
1. The measurement shall begin 1 minute before the pressure change
2. The measurement shall end minimum 1 minute after the pressure change
3. The sampling rate shall be TBD

Calibration report data products
1. Time constant.
2. A graph showing the calibrated pressure of barocap and reference sensor versus time.

11.3.2.4 Calibration Check during MSL-level System Thermal Test

Purpose and description

At ATLO a calibration check in Martian pressure is required to check the sensor's operation after contamination control and integration to the rover and to get data for compensating rover thermal effects. The System Thermal Test (STT) offers the only opportunity to do this. The short-term repeatability's and warm-up times of the Barocap sensor heads are determined using the data of this test as the thermal environment of the rover probably affects these parameters. The PRS shall be measured for min. 5 minutes in several temperature and pressure points inside the operational ranges during the STT.

Parameter and range
Several temperature and pressure points inside the operational ranges, including high vacuum (< 0.1 Pa).

Accuracy
The pressure shall be measured with the best accuracy of the reference pressure sensor.

Environment
Martian pressure 0 to 1400 Pa. See 'Parameter and Range' and 'Requirements' for details.

Supporting Equipment
A pressure reference sensor that meets the requirements mentioned in 0. FMI can loan a reference sensor for JPL for this purpose.

Requirements
1. The pressure sensor shall be kept in low pressure (<50 Pa) for minimum 2 h before the first measurement for outgassing purposes.
2. The pressure shall be kept in the Martian pressure range (<1400 Pa) during the whole test.

Calibration report data products
1. Correction parameters for compensating calibration changes and rover thermal effects.
2. Short-term repeatability for each Barocap sensor head.
3. Warm-up time for each Barocap sensor head.

11.4 PRS END - TO - END SYSTEM CHECK

During the Pressure Sensor Calibration Process, a selection of a few data products in different conditions will be kept to assure an end to end calibration. These tests can be considered as a set of functional tests. PR7 and PR16 can be considered as end to end calibration tests.

12 AIR TEMPERATURE SENSOR CALIBRATION

The Flight, Qualification and Engineering models of the REMS ATS of Booms 1 and Booms 2 will be subject to a set of calibration tests that are described in the present calibration plan.

All tests cannot be performed on all models. The FM will be subject to a minimum of tests just to ensure it is identical geometrically and physically to the EM and the QM.
The primary goal of the ATS calibration and functional tests is to verify that it will meet or exceed all the L2 requirements described in the Instrument Functional Requirements Document AD1. Briefly, The REMS ATS shall be able to measure the temperature of air flowing over the booms over the range of 150 to 300 K with a resolution of 0.1 K and an accuracy of 5 K.
REMS also shall measure the Air Temperature at a minimum sampling rate of 1 Hz for at least 5 minutes each hour continuously over the mission.

The purpose of this plan is to describe the methodology to calibrate the ATS by defining the tests needed to verify that the sensor will fulfill all the functional requirements. The calibration plan includes a test sequence, so that the verification of requirements takes place in a systematic and unambiguous way. The tests described in this plan will produce the data required to clearly understand the accuracy, precision, and limitations of the ATS tests.

12.1 SENSOR OVERVIEW

12.1.1 Air Temperature Sensor Description

As mentioned in previous sections, two sensors will measure the air temperature, each attached to one boom, at approximately 1.6 m above the Martian surface.

The Air Temperature Sensor (ATS) has two components.

In the first design, the transducer of the REMS ATS consists on a very small thermistor (Resistor Temperature Dependant, RTD) of dimensions 1.2mm x 1.6mm. This RTD is a Pt1000 from Minisens (IST), which follows the Pt1000 Class A norm.

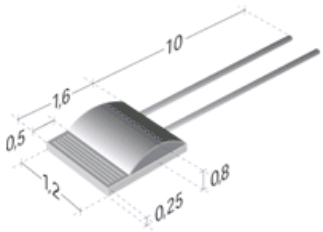

Figure 12-1 Minisens Pt1000 sensor

The Pt1000 RTD is attached to the free extremity of a small beam composed of a multi layer FR4 material with a 2x3 mm2 section and 35mm long. This supporting beam is secured on its opposite end to the bottom of the ASIC casing as shown in Figure 12-2.
On the surface of a FR4 layer located inside the beam PCB traces are printed to transmit the electric signals from the sensor to the ASIC electronics. The PCB traces are 17μm thick and 0.25mm wide and printed in a zig-zag shape to maximize the total length and increase heat losses by conduction. In

this way we expect to minimize the heat conduction from the ASIC and boom to the RTD. The Pt1000 is glued at the free end of the FR4 beam with its cables soldered to the dedicated pads. At the other end of the PCB board similar pads electrically link the traces with the pads of the ASIC PCB, using a pair of cables. Figure 12-2 shows the location of the Pt1000 at the tip of the FR4 beam and the whole assembly attached to the Boom.

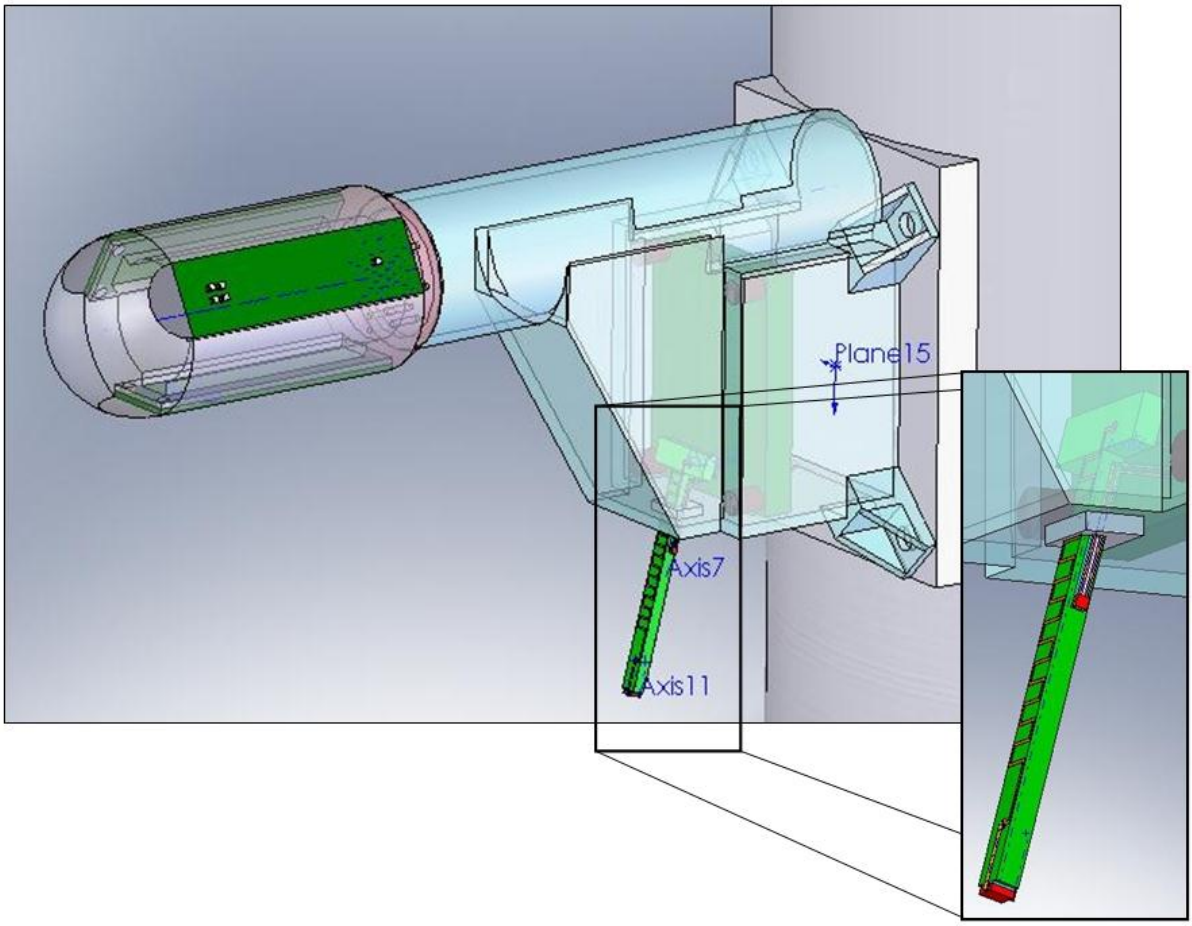

Figure 12-2 Air Temperature Sensor location and diagram

The sensor's configuration uses two cables, because the sensor resistance is large compared to the resistance of the cables which can therefore be neglected. The measurement biasing is 1mA, limited in time to reduce self heating: only during 1/16 of the 5 minutes planned reading time the sensor will be power supplied to measure its resistance. Total power dissipation will be around 62□W, which is small enough so that we can assume self heating to be negligible.

To build up an empirical thermal model of the sensor, an additional temperature measurement is required. This is the temperature of the boom where each ATS is attached. For the ATS of Boom 1, it will be measured using the internal sensor of one of the thermopiles, that can be considered a good estimator of the temperature at the end of the FR4 beam close to the boom. See Figure 12-3. For the ATS of Boom2, a Pt1000 has been added inside the Boom.

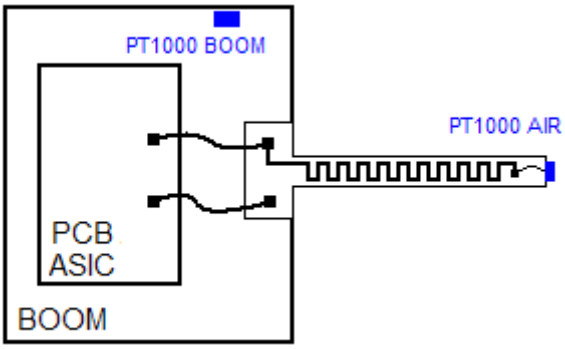

Figure 12-3 Additional temperature sensor location on the Boom

An additional temperature is needed to evaluate the global thermal heat exchange coefficient. This is the reason why a second component is a thermistor with the same characteristics of the previous Pt1000 added to the FR4 beam at a location close to the boom. We will measure its location during the calibration campaign. This configuration is described in RD31. It ensures two measurements for each ATS and presents the advantage of having both thermistors in contact with the atmosphere and the FR4 beam. The Pt1000 and its cables are glued at a lateral face of the FR4 as is shown on Figure 12-4.

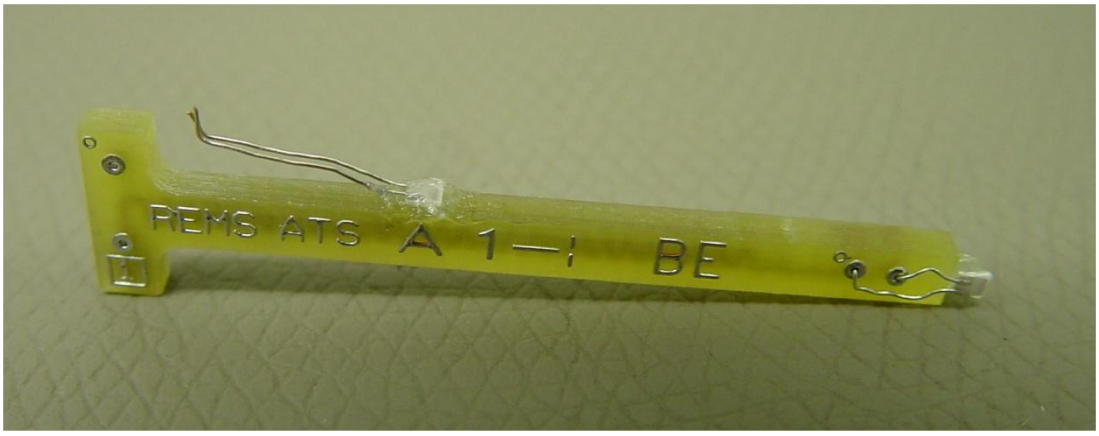

Figure 12-4 REMS ATS

12.1.2 Sensor model

The REMS ATS would measure the ambient air temperature under free flow conditions, in the absence of disturbances created by the platform on which it is mounted. However, the mechanical integration with the rover imposes the thermal and hydrodynamic influence of several rover components on the ATS.

The ATS design intends to minimize the influence of these external sources. This objective is achieved firstly by mechanical design, secondly by using a sensor empirical model to correct the possible sources of error and, thirdly, by performing simulations and theoretical modelling of the error sources. The main objective of this section is to describe the sensor thermal model that will be used to correct the sensor measurements.

The ATS is subject to different sources of error such as, heat conduction throughout the FR4 beam, thermal boundary layers effects from boom and mast, direct solar irradiation and rover thermal influence due to radiation and convection. Additionally, it can be said that the sensor will principally

measure the temperature at the tip of the FR4 beam that may differ from the atmosphere temperature, because of two reasons:

1. Because the Martian atmosphere is very tenuous, convective heat transfer is inefficient. The equivalent thermal resistor that links the Pt1000 and the atmosphere is large.
2. The Pt1000 cables and the glue used to fix the Pt1000 sensor present good thermal conductance of order unity (Siemens). Therefore, the equivalent thermal resistor between the Pt1000 and the tip of the FR4 beam is smaller than that between the Pt1000 and the atmosphere.

The ATS consists on the Pt1000 sensor on the tip, the FR4 as a whole and the Pt1000 sensors that monitor its temperature profile. This information together with a knowledge of the temperature at the base of the FR4 (boom temperature) shall serve to estimate the temperature of the air around it. Having these three temperatures, one can estimate simultaneously the temperature decay profile (which depends on the instantaneous convection-conduction scenario) and the fluid temperature univocally. A set of algorithms and theoretical models have been developed to do this inversion process. The accuracy of the ATS measurements will mostly depend on the ability of these models and algorithms to retrieve the fluid temperature. This accuracy will be calibrated following this plan.

The thermal model of the FR4 beam is based on the theory of heat transfer from a fin of constant section inside a fluid. In this context, a fin is a surface extending from an object intended to increase the rate of heat transfer to or from the environment by maximizing the exposed surface area. The FR4 beam can be studied as a fin, transfering heat from the boom to the environment.

For long fins with constant cross-section (where heat transfer through the tip can be ignored), and assuming a constant heat transfer coefficient along its length, the temperature difference between the free end of the fin and the fluid is given by:

$$\frac{T_L - T_F}{T_0 - T_F} = \frac{1}{Ch(mL)} \tag{1}$$

where *Ch* is the hyperbolic cosine, T_F is the temperature of the fluid, T_L is the temperature at the free end of the fin, T_0 is the temperature at the root of the fin (the boom end), *L* is the fin length, and *m* satisfies the expression, *h* is the total heat transfer coefficient encompassing convection, conduction and radiation.

$$m = \sqrt{h \cdot p / k \cdot A}$$

where p is the perimeter of the fin, A is the fin cross-sectional area, *k* is the thermal conductance of the fin material and

Equation (1) can be solved for T_F, the temperature of the fluid.

$$T_F = \frac{T_0}{1 - Ch(mL)} + \frac{Ch(mL) \cdot T_L}{1 - Ch(mL)} \tag{2}$$

Atmosphere temperature is given by Equation (2) and it depends on the value of the temperature measured by the sensor at the tip of the FR4 beam, the temperature at the root of the beam (the boom end), some geometrical parameters and the value of *h* , which must be tabulated by mean of calibration tests.

The response time is also a fundamental characteristic of the ATS because it determines its capability to detect sudden changes in atmospheric temperature. The ATS calibration model must therefore include an analytical expression for the response time of the sensor.

Unfortunately, the ATS is not thermally isolated from the elements around it, hence the response time of the ATS is influenced by the response time of, at least, the Pt1000, the FR4 beam and boom. The response time of the Pt1000 sensor can be neglected in comparison with that of the FR4 beam. The time constant of the boom is much larger than the time constant of the FR4 beam, essentially due to its larger mass. Nevertheless, its influence in the effective time constant of the sensor can be neglected because of two reasons: first the uncertainty in atmosphere temperature measurements generated by boom temperature is compensated using the thermal model of the FR4 beam, and second its effect change very slowly and therefore can be easily differentiated from the time constant of the FR4. Thus, we can assume that the response time of the whole sensor is equal to the response time of the FR4 beam alone, and that its value can be expressed approximately by:

$$\tau = \frac{m_{FR4} \cdot C_e}{h \cdot S_{FR4}} \tag{3}$$

where m_{FR4} is the FR4 beam mass, C_e is the FR4 specific heat coefficient, h is the heat transfer coefficient that entails convection, conduction and radiation with the environment, and S_{FR4} is the FR4 beam surface in contact with the atmosphere. Equation (3) shows that the only factor that governs the value of the time response during Martian operations is h. The response of the ATS system is compared with the temporal response of a first order system, meaning that τ represents the time required by the ATS to achieve by definition the 63% of the temperature final value.

The local heat transfer coefficient h measures the heat transferred per surface unit and per time unit. It encompasses heat exchanged with the atmosphere by different modes: conduction, radiation, natural convection and forced convection reads

$$h = h_c + h_{nc} + h_{fc}$$

where h_c is the contribution to heat transfer by conduction while h_{nc} and h_{fc} are the contributions from natural and forced convection respectively.
A general local heat transfer coefficient is considered during the calibration because as it is shown in the next paragraph, it is difficult to obtain the value for each heat transfer mode. But in a general way to obtain the order of magnitude of each contribution, neglecting radiation in a first step, the total heat transfer coefficient h will therefore depend on the fluid properties: temperature T_F, velocity $|v|$ and its direction, density which is related to the pressure of Martian atmosphere p_F., through the dimensionless numbers. All these variables - e.g. temperature, pressure and wind speed - change during Martian operation and affect each contribution.

To determine the ATS response, we carry out several tests under different pressure and temperature conditions. On each test the value of h, needed as input for numerical models, can be retrieved from the temperatures measured at both FR4 beam thermistor. By solving equation (1) for h, an expression for the global heat transfer coefficient is obtained:

$$h = \frac{k.A \cdot \left[arcCh\left(\frac{T_0 - T_F}{T_L - T_F} \right) \right]^2}{p \cdot L^2} \tag{4}$$

This simple fin model sets the main line to be investigated. The second sensor on the FR4 beam adds heat conduction through the cables linked to the boom that can be considered as heat source for the part of the FR4 close to the boom.
The first part of the calibration tests performs the Pt1000 characterization versus temperature. This enables to obtain the temperature in the sensor location fulfilling the L2 requirements; to determine the Pt1000 location on the FR4 beam; the off-set determination of the Pt1000. The second part consists on providing temperature measurements to validate the physical/numerical thermal models under different atmospheric conditions, corresponding to several global heat transfer coefficient, which are necessary to deduce the air temperature in the absence of rover influence: under pressure variations and under atmospheric temperature variations; to measure the sensor response time as a function of pressure and to measure response time as a function of atmospheric temperature and to measure response time as a function of wind.
In addition to these calibrations, a series of tests will be performed under ambient, vacuum and Martian atmosphere conditions to verify instrument functional performance, including end-to-end tests and the command and data link. A quantification of the errors introduced by radiation, both solar heating and IR radiation from rover body and RTG, wind influence, convective cells created by the rover body and RTG, and boundary layer effects created by mast and boom surfaces will be achieved through CFD simulations.

12.2 FACILITIES

Before starting with the description of each test, a sort review of the most relevant details of the test facilities is given in 9.2.3 (CRISA Vacuum chamber) and 9.2.4 (Linear Motion facility).

12.2.1 CAB Mars Environmental Simulation Chamber

The environmental temperature shall be calibrated from -100ºC to 20ºC.
See 9.2.9.

12.3 TESTS AND PROCEDURES

Technically the purpose of the calibration tests is to determine those unknown parameters that appear in the sensor physical/numerical models. Once these variables are known the model can solve the value of the air temperature and the time response of the system. A detailed analysis of sensor thermal models and physical structure shows that the calibration test must include:

1. Pt1000 characterization & temperature
2. temperature measurements along the FR4 beam under different conditions
3. sensor response time τ under different conditions

sources of error such as Sun, RTG and rover deck IR radiation are omitted from this calibration plan. Thus it is necessary to study apart the contribution of these factors and also to determine under which configuration of wind, direction and velocity, each boom enables to determine the unperturbed temperature of the atmosphere. This last point will be achieved with the help of the physical/numerical models.

The calibration approach is based on the next premises:

4. the length, composition and section of the FR4 beam are defined by design, the parameters S_{FR4}, L, A, p and k are known.

5. because the geometry is similar for the FM, QM and EM models, once verified, the practical identification for one of the booms can be applied to the others.
6. The calibration of the Pt1000 sensor inside the thermopiles is described in the chapter dedicated to the GT-sensor.

The calibration tests will be carried out mainly for the QM model used as back-up and the EM model.

Table 12-1 ATS Calibration Tests

provides an overview of the ATS calibration and testing requirements. Each of these tests is described in more detail in subsequent sections.

Test ID	Test name	Model	Environmental Conditions	Brief Description	Test order And Priority
AT_1	Pt1000 characterization versus temperature	Pieces of the FM and QM batch	Iso-thermal air chamber Temperatures from 200K to 320K with intervals of 10K	Obtain a representation of resistance versus temperature for each Pt1000, as well as a polynomial to correct the deviation from the Pt1000 norm.	1 (HIGH)
AT_2	Thermistors location	FMs, QMs EM2/EM3	Terrestrial ambient	Measure Pt1000 location on the FR4 beam	2.1 (HIGH)
AT_3	Off-set determination	FMs, QMs	Vacuum Ambient Temperature: 180K:20K:320K	Measure Pt1000 off-set	2.2 (HIGH)
AT_4	ATS & atmosphere pressure	QMs EM2/EM3	Martian like atmosphere (composition and pressure), Temperature of 298K	Models validation & atmosphere pressure	3.1 (HIGH)
AT_5	ATS & atmosphere temperature	QMs EM2/EM3	Martian like atmosphere (temperature, pressure and composition)	Models validation & atmosphere temperature	3.2 (HIGH)
AT_6	ATS response time & atmosphere pressure	QMs EM2/EM3	Martian like atmosphere (composition and pressure), Temperature of 298K	Obtain sensor response time & pressure	4.1 (HIGH)
AT_7	ATS response time & atmosphere temperature	QMs EM2/EM3	Martian like atmosphere (temperature, pressure and composition)	Obtain sensor response time & atmosphere temperature	4.2 (HIGH)
AT_8	ATS response time & wind	QMs EM2/EM3	Martian like atmosphere (composition and	Obtain sensor response time & wind	4.3 (HIGH)

			pressure), Temperature of 298K		
AT_9	Solar radiation Influence	QMs EM2/EM3	Martian like atmosphere (composition and pressure), Temperature of 298K	Determination of the solar radiation effect on the sensor	5.1 (MEDIUM)
AT_10	Wind Influence	QMs EM2/EM3	Martian like atmosphere (composition and pressure), Temperature of 298K	Determination of the wind effect on the sensor	5.2 (MEDIUM)

Table 12-1 ATS Calibration Tests

12.3.1 Schedule

The schedule for calibration testing for REMS ATS is given in table.

Test name	Days	People	Dates	Test place and facilities
Pt1000 characterization versus temperature	15	Responsible: Eduardo Sebastián Assistant: INTA Staff	15.12.2007	INTA Calibration Department
Thermistors location	3	ATS team	FMs: September QMs: October EMs: Agust	CRISA CAB CAB
Off-set determination	10	ATS team	FMs: September QMs: October	CRISA Thermal Vacuum Chamber
ATS & atmosphere pressure	12	ATS team	After FM Delivery	CAB facilities
ATS & atmosphere temperature	12	ATS team	After FM Delivery	CAB facilities
ATS response time & atmosphere pressure	8	ATS team	After FM Delivery	CAB facilities
ATS response time & atmosphere temperature	12	ATS team	After FM Delivery	CAB facilities
ATS response time & wind	4	ATS team	After FM Delivery	CAB facilities
Solar radiation influence	4	ATS team	After FM Delivery	CAB facilities

Wind influence	4	ATS team	After FM Delivery	CAB facilities
TOTAL	86			

Table 12-2 ATS Calibration Testing Schedule

12.3.2 Pt1000 Characterization versus Temperature.

Purpose and description

The purpose of the tests is to obtain a representation of temperature measured by the RTDs, according to the Pt1000 norm, versus real temperature by a reference probe.

The thermopiles' RTD and the calibration plate's RTD are equal; specifically they are the Pt1000 of MINISENS P1k0.323.4Wx.010 DIN class A. The manufacture ensures the tolerances of the sensors according with the norm DIN class A, this temperature error is equal to ±(0.15+0.002·T[°C]).This tolerance is initially compliant with the GTS L2 requirements, and this calibration test tries to confirm and particularise sensor performance.

The tests will be carried out at INTA facilities in the Meteorological and Calibration Department, following the recommendations of EIT-90. The Pt1000 shall be calibrated in a range from 193K to 333K using a bath of ethanol till 295K and silicon grease from 295K to 333K. The sensor is introduced inside a pyrex tube hermetically sealed. The tube is full of the electrical and volatile fluid FLUORINERT 84 from the company 3M.

The Martian temperature working range is not completely covered. Outside the tested range the sensor shall not be calibrated, considering the uncertainty values provided by the Pt1000 manufacturer. The reason is that previous tests with the same sensor have shown good performance at 77K (LN2 bath). Therefore, no specific calibration test is necessary to reproduce this analysis for the FM and QM.

Parameter and range
Pt1000 temperature from 200K to 333K

Test Accuracy
Pt1000 temperature error ±0.15K

Environment
Ethanol and silicon grease baths

Supporting Equipment
Thermal bath calibrated chambers
Calibrated temperature sensor
Calibrated ohmmeter

Requirements
The test shall be directly carried out with four the six thermopiles (Pt1000 inside the thermopiles) selected to be mounted on the FM and QM models. Therefore, the calibration test will be developed before the thermopiles are allocated in their final disposition, and calibrations results for each Pt1000 sensor will be applied to the FM and QM thermopiles.

Two of the four sensors shall be mounted on the FM, while two additional Pt1000 sensor of the same batch but not calibrated will be used for the QM ATS. Therefore, Pt1000 calibration results shall be directly applied to the FM and manufacturer tolerances will be considered in the case of the QM.

Calibration report data products
The certificate of calibration will include data with the difference or drift between the real temperature and the temperature measured by each Pt1000. Additionally, a polynomial interpolation between the real and measured temperatures will be provided for each sensor.

12.3.3 Thermistors location

Purpose and description
The test is dedicated to measure the position of the thermistors located on the FR4 beam to ensure that all ATS mounted onto the FM, QM and EM models are geometrically identical, and also to compare temperature measurements with the thermal model results for temperature as a function of position.

Test Accuracy
Thermistor position error ±0.1mm

Environment
Ambient

Supporting Equipment
Digital camera and metric reference

Requirements
Digital camera shall be perpendicular to the FR4 beam plane

Calibration report data products
Digital picture files and text file indicating the thermistors position

12.3.4 Off-set determination

Purpose and description

The goal of this test is to obtain the off-set of the measured temperature by the thermistors. Test will be performed during the estimation at TVT of the FM's and QM's booms losses estimation (vacuum temperature cycles) in CRISA vacuum chamber. The test is described in RD32.

Parameter and range
Atmosphere temperature in the range 138K-313K

Test Accuracy
Vacuum Chamber Temperature ±0.1K
Vacuum Chamber Temperature Stability ±0.5K

Environment
Vacuum: Pressure below 10^{-5} Torr.

Supporting Equipment
Vacuum chamber with temperature control: SERAE TVC-1
Calibrated Thermocouples

Requirements
The booms must be completely assembled and screwed to a thermal inertia dummy simulating mast thermal properties.
The test will be carried out with the FM and QM models
The temperature data are recorded after thermal stabilization

Calibration report data products
The digital file containing the deduced off-set.

12.3.5 ATS & atmosphere pressure

Purpose and description
The test is dedicated to obtain temperature data measurements that validate physical/numerical models at several atmospheric pressures.

The boom is heated to create a temperature gradient in the FR4 beam. While the temperature of the boom remains constant, the temperature at the tip of the FR4 beam changes with the atmosphere pressure. The temperature of the air in the chamber is also monitorized.

Parameter and range
Atmosphere temperature shall be ≈ 298K
Mars like atmosphere pressure at 200Pa, 400Pa, 600Pa, 800Pa and 1000 Pa
Boom temperature must be set at 5 K, 10K, 15K and 20K over the atmosphere temperature

Test Accuracy
Temperature errors measured ±0.2K
Pressure error ±10Pa

Environment
Mars like atmosphere (pressure and composition)

Supporting Equipment
Boom and its ground support equipment
Mars simulation chamber (CAB)
Heaters and thermal control system
Calibrated atmospheric temperature sensor

Requirements
The booms must be completely assembled and screwed to a thermal inertia dummy simulating mast thermal properties.
The test will be carried out with the EM and QM models
The temperature data are recorded after thermal stabilization

Calibration report data products
Digital files and plots for several atmosphere pressures at ambient temperature and errors together with the 3 reference temperatures of the FR4 and the ambient temperature.

12.3.6 ATS & atmosphere temperature

Purpose and description
The test is dedicated to obtain temperature data measurements and validate physical/numerical models under several temperatures expected in Mars.

The test, as the previous ones, needs to create a temperature gradient in the FR4 beam, and to do it the boom must be heated to do it. Thus, while the temperature of the boom remains constant, the

temperature at the tip of the FR4 beam changes with the atmosphere temperature. The temperature of the air in the chamber is also monitorized.

Parameter and range
Atmosphere temperature at 288 K, 298 K, 313 K and 328 K
Mars like pressure at 600Pa
Boom temperature must be set at 5 K, 10 K, 15 K and 20 K over the atmosphere temperature

Test accuracy
Temperature errors measured ±0.2K
Pressure error ±10Pa

Environment
Mars like atmosphere

Supporting Equipment
Boom and its ground support equipment
Mars simulation chamber (CAB)
Heaters and thermal control system
Calibrated atmospheric temperature sensor

Requirements
The booms must be completely assembled and screwed to a dummy simulating the mast thermal properties. The test will be carried out with the EM and QM models
The temperature data are recorded after thermal stabilization

Calibration report data products
Digital files and plots for several atmosphere temperatures shall be produced for ambient temperature estimates and errors together with the 3 reference temperatures of the FR4 and the ambient temperature.

12.3.7 ATS response time & atmosphere pressure

Purpose and description
The test will obtain temperature data measurements to validate physical/numerical models and the FR4 response time under sudden changes at different atmospheric pressures.

Parameter and range
Boom, ASIC and atmospheric temperature must remain constant at ambient conditions ≈298K
Mars like atmosphere in composition and pressure at 4mbar, 6 mbar and 10mbar
Sensor beam must be heated at least 5K over ambient temperature

Test accuracy
Temperature errors measured ±0.2K
Pressure error ±10Pa

Environment
Mars like atmosphere

Supporting Equipment
Boom and its ground support equipment
Mars simulation chamber (CAB)
Heaters and thermal control system

Requirements

The booms must be completely assembled and screwed to a dummy simulating the mast thermal properties. The test will be carried out with the EM and QM models

Calibration report data products
Digital files and plots shall be produced for the evolution of the ATS and the value of the response time τ versus atmosphere pressure

12.3.8 ATS response time & atmosphere temperature

Purpose and description
The test will obtain temperature measurements to validate physical/numerical models and the FR4 response time under sudden changes at different atmospheric temperatures.

Parameter and range
Atmosphere temperature at 288 K, 298 K, 313 K and 328 K
Mars like pressure at 600Pa
Sensor beam must be heated at least 5K over ambient temperature

Test accuracy
Temperature errors measured ±0.2K
Pressure error ±10Pa

Environment
Mars like atmosphere

Supporting Equipment
Boom and its ground support equipment
Mars simulation chamber (CAB)
Heaters and thermal control system

Requirements
The boom must be completely assembled and screwed to a dummy simulating the mast thermal properties.
The test will be carried with the EM and QM models

Calibration report data products
Digital files and plots shall be produced for the evolution of the ATS versus atmosphere temperature, also the final value of the response time τ versus atmosphere temperature will be provided.

12.3.9 ATS response time & wind

Purpose and description
The test will obtain temperature data measurements to validate physical/numerical models and the FR4 response time under sudden changes and in different wind regimes.

Parameter and range
Boom, ASIC and atmosphere temperature must remain constant at ambient conditions ≈298K
Mars like atmosphere in composition and pressure at 400Pa, 600Pa and 1000Pa.
Sensor beam must be heated at least 5K over ambient temperature

Test accuracy
Temperature errors measured ±0.2K
Pressure error ±10Pa

Environment
Mars like atmosphere

Supporting Equipment
Boom and its ground support equipment
Mars simulation chamber (CAB)
Heaters and thermal control system

Requirements
The booms must be completely assembled and screwed to a dummy simulating the mast thermal properties. The test will be carried out with the EM and QM models

Calibration report data products
Tables and plots shall be produced for the evolution of the ATS and the value of the response time τ versus wind intensity

12.3.10 Solar Radiation Influence

Purpose and description

The objective of this test is to determine the effect of the solar radiation on ATS. Solar radiation at the top of the Mars atmosphere reaches peak values ranging from 500 to 700 W/m^2.
Previous simulations and theoretical models show that to some extent solar radiation affects the air temperature measurement, and therefore it is necessary to obtain an upper-bound estimate of the error induced by radiation. With this purpose, a test will be performed to obtain an upper-bound estimate on the error introduced by solar radiation versus incidence angle.

The tests will be performed in the Linear Motion facility at CAB. Previously calibrated lamps will simulate the sun radiation, so that at the distance at which they are located they supply the equivalent of the expected Martian surface radiation.

The tests will verify how the radiation alters the ATS sensor output. In the case the effect is significant, either an upper-bound error due to radiation will be calculated or a criterion for discarding non-valid measurements will be established.

Parameter and range
Mars like pressure at 6mbar
Temperature: 298K

Boom, ASIC and atmosphere temperature must remain constant at ambient conditions ≈298K
Incident radiation 600W/m^2
Incidence angles combinations
Yaw angle: 0°, 45°, 90°, 135°, 180°.
Pitch angle: 45°

Accuracy
The radiation will be stable in time (testing time= 100s).
Temperature errors measured ±0.2K
Pressure error ±10Pa

Environment

Martian like atmosphere

Supporting Equipment
Linear Motion facility (CAB)

Requirements
A test without radiation will also be performed, as a comparison basis of the rest of the tests.
Likewise the title of all files should include the kind of radiation test performed as well as either the radiation incidence angle or the shadowed dice. Temperature and pressure readings will also be included.

Report Data Products
The report will include all files with all the individual readings taken during the campaign. Comparing the results obtained in the test without radiation with all radiation tests, an upper-bound error due to radiation will be calculated.

12.3.11 Wind Angle influence

Purpose and description
The objective of this test is to determine the effect of the wind on ATS under different wind incidence angles.

In order to create a temperature gradient in the FR4 beam, the boom is heated. Thus, while the temperature of the boom remains constant, the temperature at the tip of the FR4 beam changes with the wind velocity.

When the ATS is not under a wind cross flow conditions, the temperature measured by the sensor at the tip of the FR4 beam does not only depends on the wind velocity. Parameters such as wind direction, mast and boom temperatures, and boundary layers thickness are fundamental factors that affect the measured temperature. Therefore, a detailed analysis of these factors is required. This study will be performed later based on test data and simulations.

Parameter and range
Atmosphere temperature shall be ≈298K
Mars like atmosphere pressure at 6 mbar
Sensor beam must be heated at least 5K over ambient temperature
Incidence angles combinations
Yaw: 0°, 30°, 60°, 90°, 120°, 150°, 180°.
Pitch: 0°, 15°, 30°, 45°

Test accuracy
Temperature errors measured ±0.2K
Pressure error ±10 Pa

Environment
Mars like atmosphere in composition and pressure

Supporting Equipment
Boom and its ground support equipment
Mars simulation chamber (CAB)
Heaters and thermal control system
Calibrated atmospheric temperature sensor

Requirements
The booms must be completely assembled and screwed to a dummy with the mast thermal inertia properties.

The test will be carried with the EM and QM models
The temperature data are recorded after thermal stabilization

Calibration report data products
Digital files and plots shall be produced for ambient temperature estimates and errors together with the 3 reference temperatures of the FR4 and the ambient temperature.

12.4 AIR TEMPERATURE SENSOR END TO END SYSTEM CHECK

To confirm the end-to-end capabilities of the ATS and ground data software to deliver valid science data products, selected ATS data products, mainly CFD simulations, will be generated. In order to obtain those ground data, processing software and available calibration data during the course of the ATS calibration process will be used.

The tests will be carried out using the qualification model previously calibrated and including the whole sensor electronical and mechanical structure

The output products will include:

1. CFD simulations on the influence of thermal radiation from the RTG, rover deck and ground.
2. CFD simulations to determine rover influence in ATS measurements versus wind direction, including natural convection generated by the deck and RTG as well as boundary layer effects introduced by the mast and boom.
3. The output of dedicated experiments to validate the CFD results.

At least one data product will be produced and verified for each set.